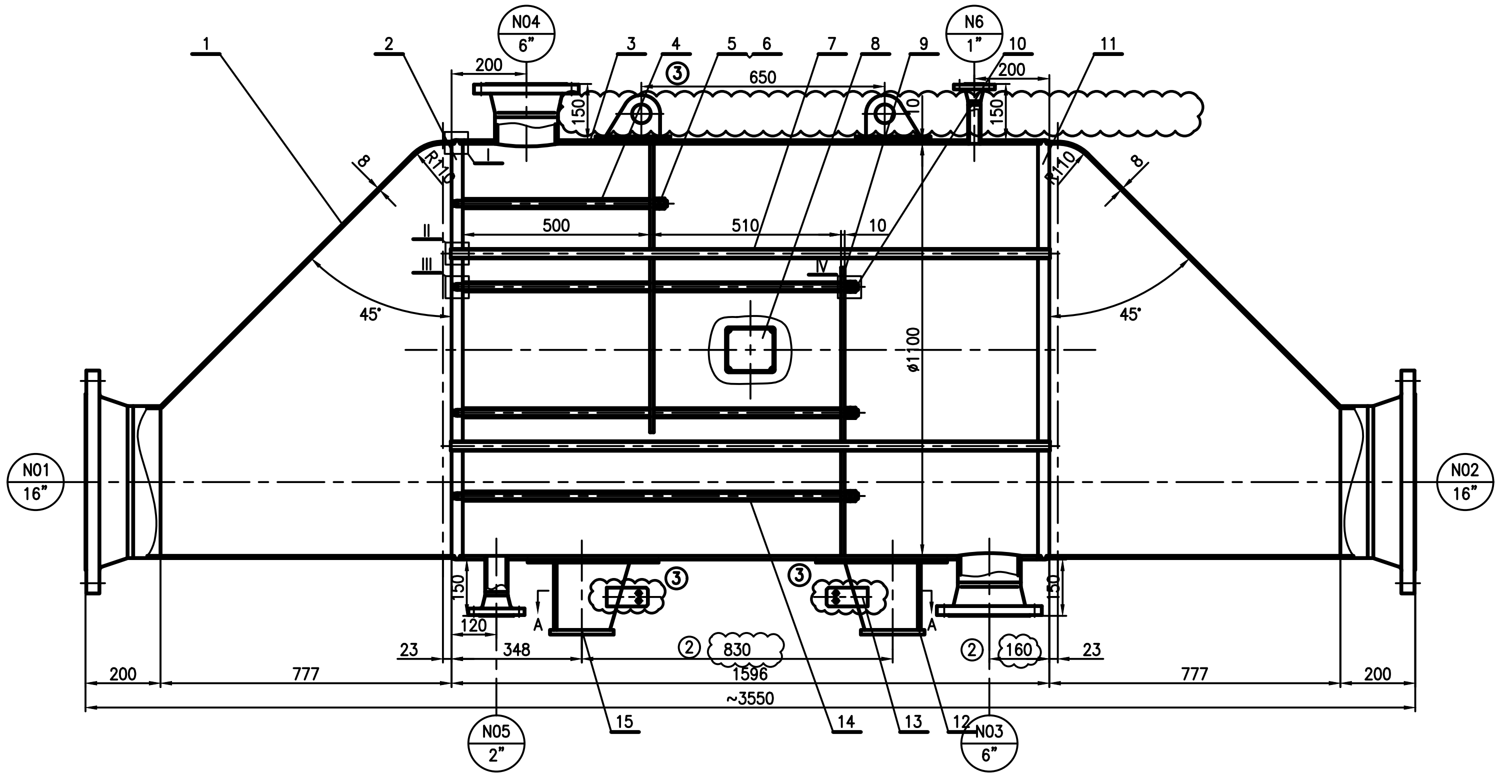

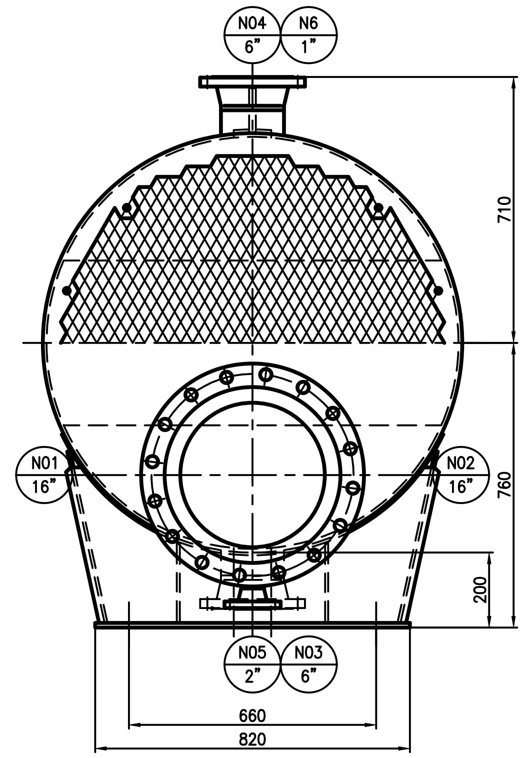

I
1:1

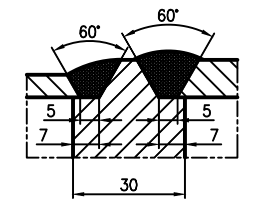

II
1:1

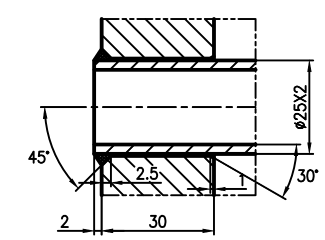

III
1:1

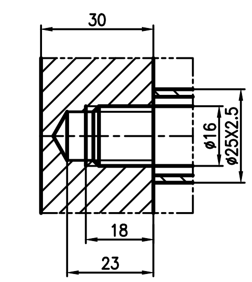

IV
1:1

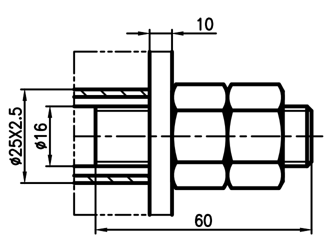

接地板??
Detail Of Earthplate
1:5

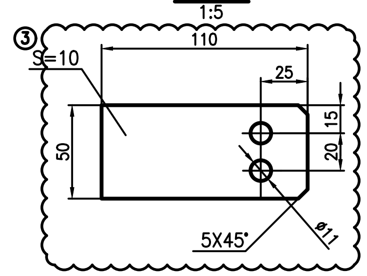

吊耳
1:3

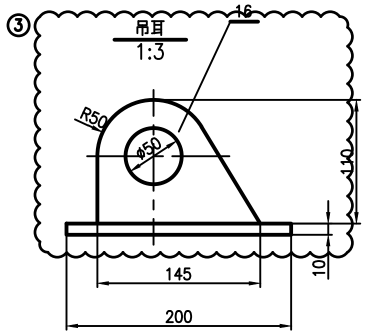

A–A
1:10

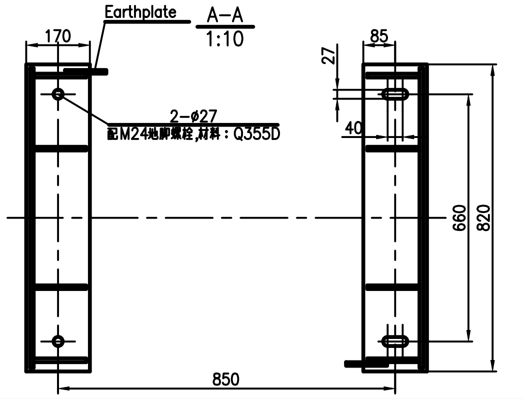

A,B????点
WELD JOINT FOR A,B CATEGARIES WELDING
不按比例 No Scale

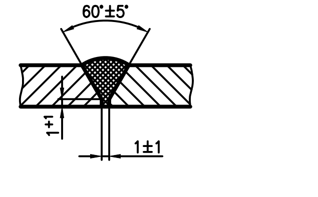

接管D????点
Nozzle Weiding Detail
不按比例 No Scale

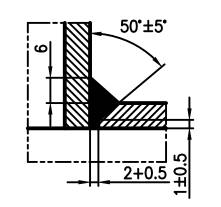

??管排列形式
Arrangement form of heat exchange tubes
1:1

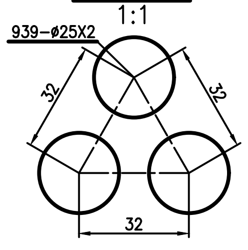

管口符号 NOZZLE MARK	?号或?准号 DRAW NO. OR STANDARD NO.	名称 DESCRIPTION	数量 QTY.	材料 MATERIAL	? 单	? 总 重量(Kg)WET	REMARK
N06	ASME B16.5	法? 1" Class150 WN RF Flange	1	20 II		1.14	
		接管 ø34X4 Pipe	1	20		0.35	L=104
N05	ASME B16.5	法? 2" Class150 WN RF Flange	1	20 II		2.72	
		接管 ø60X4 Pipe	1	20		0.5	L=96
N03,04	ASME B16.5	法? 6" Class150 WN RF Flange	2	20 II	11.8	23.6	
		接管 ø168X6 Pipe	2	20	2.1	4.2	L=75
N01,02	ASME B16.5	法? 16" Class150 WN RF Flange	2	S30408 III	51.8	103.6	
		接管 ø406X6 Pipe	2	S30408	4.4	8.8	L=73

序号 ITEM NO.	?号或?准号 DRAW NO. OR STANDARD NO.	名称 DESCRIPTION	数量 QTY.	材料 MATERIAL	? 单	? 总 重量(Kg)WET	?注 REMARK
16		吊耳 S=18 Lifting lugs	2	Q235B	3.5	7.0	
15	NB/T47065.1–2018	鞍座 BI 1000–F Support	1	Q235B/Q345R		85.0	
14		定距管 ø25X2.5 Spacer	2	20	1.6	3.2	L=1010
13		接地板 S=10 Earthplate	2	S30408	0.4	0.8	
12	NB/T47065.1–2018	鞍座 BI 1000–S Support	1	Q235B/Q345R		85.0	
11	24SY042–016–01	管板 Tube sheet	1	S30408		234	
10	24SY042–016–01	拉杆 ø16 Tie Rod	6	20	1.7	10.2	L=1080
9	24SY042–016–01	折流板 S=10 Baffle	2	Q235B	60.0	120	
8		?牌 Name plate	1	?合件 Subassembly		/	
7		??管 ø25X2 Tube	939	S30408	1.84	1728	L=1600
6	GB/T6170–2015	螺母 M16 Nut	16	8? 8 Class	0.03	0.48	
5	24SY042–016–01	拉杆 ø16 Tie Rod	2	20	0.9	1.8	L=570
4		定距管 ø25X2.5 Spacer	10	20	0.8	8.0	L=500
3		筒体 DN1100X10 Shell	1	Q345R		422	L=1540
2	24SY042–016–01	管板 Tube sheet	1	S30408		234	
1		斜?? S=8 Cone	2	S30408	113	226	

??.制造.??数据
DESIGN.MANUFACTURE AND INSPECTINON DATA SHEET

?准?范 CODE & STD.
1、GB150.1~4–2024<<?力容器>> "PRESSURE VESSELS"
2、GB/T151–2014《?交?器》 "HEAD EXCHANGERS"

名称 DESCRIPTION		?程 SHELL SIDE	管程 TUBE SIDE
最高工作?力 MAX.OPER.PRESS (TOP)	kg/cm²	4	0.5
???力 DESIGN PRESSURE	kg/cm²	4.5	1
工作温度 OPERATION TEMPERATURE	°C	60/75	200/140
??温度 DESIGN TEMPERATURE	°C	150	250
平均金属壁温 MEAN METAL TEMP.	°C	–	–
最低??金属温度 MIN.DESIGN METAL.TEMP	°C	–	–
工?介? PROCESS FLUID 名称 CONTENT		水 WATER	甲?、空气 METHANOL, AIR
毒性危害 TOXIC		无毒 NONTOXIC	?度危害 HIGHLY TOXIC
爆炸危害 EXPLOSIVE		非易爆 UNINFLAMMABLE	易爆 EXPLOSIVE
物料密度 FLUID DENSITY	kg/m³	–	–
?力腐?介?含量 SCC MEDIUM		–	–
?? GROUP		第二?介? SECONDARY GROUP OF MEDIUM	第一?介? FIRST GROUP OF MEDIUM
主要受?元件材料 MAIN MATERIAL		?材料表 SEE TABLE OF MATERIALS	
腐?裕度 CORROSION ALLOW.	mm	2	0
?接接?系数 ?体/封? JOINT EFFICIENCY SHELL/HEAD		0.85	1.0/1.0
全容? FULL CAPACITY	m³	~0.82	~1.1
??面? HEAT TRANSFER AREA	m²	~113	
程数 NO. OF PASSES		1	1
管束?? HEAT EXCHANGER GRADE		–	
??管?格/型式 TUBE SIZE/TYPE	mm	ø25X2X1600	
管子与管板?接 TUBE TO TUBESHEET JOINT		?度? STRENGTH WELDED	
地震?防烈度（加速度） SEISMIC INTENSITY		–	
雪?荷 SNOW LOAD	N/m²	–	
保温 INSUL-ATION 材料 MATERIAL		–	–
厚度 THICKNESS	mm	–	–
??压力 TEST PRESS. 水??? HYDRO' TEST 立式 VERTI	kg/cm²	–	–
水??? HYDRO' TEST ?式 HOR.	kg/cm²	5.7	1.4
气??? PNEU. TEST	kg/cm²	–	–
气液?合?? GAS & HYDRO' TEST	kg/cm²	–	–
泄漏??压力 LEAKAGE PRESS. 气密性?? GAS LEAKAGE. TEST 立式 VERTI	kg/cm²	–	–
气密性?? GAS LEAKAGE. TEST ?式 HOR.		–	1
?漏 LEAKAGE CHECK	kg/cm²	–	–

项目				
容器?? VESSEL CLASSIFICATION	–			
???估?告 RISK EVALUATING REPORT	不需要 NA			
??使用年限/循?次数 DESIGNED LIFE/RECURRENT TIMES	15年 15 YEARS			
?接?程 WELDING SPEC.	NB/T47015–2023			
?接?型 WELDED JOINT TYPE	除?中注明外,?接接?型式按HG/T20583–2020中?定;角?的?角尺寸按?薄板厚度;法??接按相?法??准中?定;其余参照GB/T985.1,2–2008中?定. BESIDE OTHERWISE NOTED IN THE DWG, THE TYPES AND DIMESSIONS OF WELDED JIONT SHALL REFER TO HG/T20583–2020. THE HEIGHT OF FILLET SHALL BE EQUAL TO WHICHEVER IS THINNER BETWEEN THE TWO PLATES. THE WELDING OF FLANGE SHALL REFER TO IT'S OWN STANDARD OF FLANGE.OTHER CONSULT GB/T985.1,2–2008			
?接材料 WELDING MATERIALS 母材牌号 TRADEMARK OF PARENT METAL	?接材料牌号 TRADEMARK OF WELDING METAL			
??之? CARBON STEEL	J427			
不??之? LOW STAINLESS STEEL	A102(A132)			
??与不??之? CARBON STEEL AND STAINLESS STEEL	A302			
低合金?之? LOW ALLOY STEEL	J507			
无?? N.D.E 接??? JOINT CATEGORY	??方法 TEST METHOD	??率 EXAM. RATE	?准–技?等?–?? STD–TECHLEVEL–CLASS	
A、B 筒体 SHELL	RT	20%	NB/T47013.2–2015 AB?/III?	
A、B 管程及封? TUBE SIDE AND HEAD	RT	100%	NB/T47013.2–2015 AB?/II?	
????接? Dissimilar steel welded joint	PT	100%	NB/T47013.5–2015 I?	
管程A,B,C,D,E? TUBE SIDE A,B,C,D,E	PT	100%	NB/T47013.5–2015 I?	
管板密封面与?体??垂直度 VERTICAL TOLERANCE OF TUBESHEET SEALING SURFACE AND SHELL AXIS	mm	1		
??管数量/?距/布管方式 WELDING BETW. PIPE FLANGE AND PIPE	939/32/三角形 △			
基本??? WIND VELOCITY PRESS.	N/m²	–		
附加?荷 ADDITIONAL LOAD	N/m²	–		
??理 P.W.H.T.	NO			
未?零件切削面粗造度 SURFACE ROUGHNESS OF PART WITHOUT DWG.	50			
油漆 包装 ??要求 PAINTING PACKING AND TRANS.REQS	NB/T 10558–2021			
其它?要求 OTHER REQUIREMENTS	?技?要求 SEE TECHNICAL REQUIREMENTS			
重量 MASS ????量 NET MASS	kg	3300		
其中不????量 STAINLESS STEEL MASS	kg	–		
盛水?量 MASS FULL OF WATER	kg	~5220		
操作?量 OPERATING MASS	kg	–		
最大吊装?量 MAX.MASS LIFTING	kg	3300		
管口、支座方位 NOZ.& SUPPORT ORIETATION	按本? SEE THE DWG.			

二、主要材料
TABLE OF MATERIALS

元件名称 PARTS	材料 MATERIAL	状? SHAPE	?准号 STANDARD NO.	供?状? DELIVERY COND.	附加要求 ADDITIONAL REQUIREMENTS
?程筒体 SHELL SIDE SHEE	Q345R	板材 PLATE	GB/T713.2–2023	?? HOT–ROLLING	
管程筒体、封?及管板 TUBE SIDE SHEEL, HEAD AND TUBE PLATE	S30408	板材 PLATE	GB/T713.7–2023	固溶 SOLID SOLUTION	
??管 TUBE	S30408	管材 PIPE	GB/T13296–2023	固溶 SOLID SOLUTION	冷拔 COLD DRAWING
管程管法? TUBE SIDE FLANGE	S30408 III	?件 FORGING	NB/T47010–2017	固溶 SOLID SOLUTION	
管程接管 TUBE SIDE PIPE	S30408	管材 PIPE	GB/T14976–2012	固溶 SOLID SOLUTION	冷拔 COLD DRAWING
?程管法? SHELL SIDE FLANGE	20 II	?件 FORGING	NB/T47008–2017	正火 NORMALIZING	
?程接管 SHELL SIDE PIPE	20	管材 PIPE	GB/T9948–2013	正火 NORMALIZING	

三、管口表
NOZZLE SHEET

接管符号 MARK	公称尺寸 NORMINAL SIZE	?接尺寸?准 NOZZLES CONN_STD.	型式–密封面 TYPE/FACE	用途 SERVICE	管子尺寸 JUT LENGTH	伸出?度 LENGTH OF NOZZLE
N01	Class150 16"	ASME B16.5	WN–RF	Tube inlet	ø406X6	200
N02	Class150 16"	ASME B16.5	WN–RF	Tube outlet	ø406X6	200
N03	Class150 6"	ASME B16.5	WN–RF	Water inlet	ø168X6	150
N04	Class150 6"	ASME B16.5	WN–RF	Water outlet	ø168X6	150
N05	Class150 2"	ASME B16.5	WN–RF	Drain	ø60X4	150
N06	Class150 1"	ASME B16.5	WN–RF	Vent	ø34X4	150

技?要求 TECHNICAL REQUIREMENTS

1、??管的?准?GB/T13296–2023,其外径偏差?±0.1mm,壁厚偏差±10%S。
The standard of heat exchange tube is GB/T13296–2023 ,it's outer diameterdeviation is ±0.1mm , and its wall thickness deviation is ±10%S.

2、??水????水中??子含量不大于25mg/L.
CL CONTENT SHALL NOT BE MORE THAN 25mg/L IN WATER DURING HYDROSTATIC TEST.

3、????合格后,不??表面?清除油?做酸洗?化?理.
AFTER PRESSURE TEST OF EQIPMENT IS PASSED, GRIND WEDING SEAM OF INNER SURFACE AND THEN DO ACID–WASHING PASSIVATION TREATMENT.

4.??用不??材料及?接接??按GB/T 4334–2020《金属和合金的腐? 奥氏体及?素体–奥氏体(双相)不??晶?腐???方法》中的A法?行晶?腐?敏感性??。
Stainless steel materials and welded joints used in equipment shall undergo intergranular corrosion sensitivity testing in accordance with Method A of GB/T 4334–2020 "Corrosion of Metals and Alloys – Test Methods for intergranular Corrosion of Austenitic and Ferritic, Austenitic (Dual phase) Stainless Steel".

5.本???制??品?接?板。
~~This equipment should prepare product welding test plates.~~

6、保温和?漆按附件《22150–00000–MC05》、《22150–00000–MC08》。 ③
INSULATION AND PAINTING AS PER ATTACHMENT《22150–00000–MC05》、《22150–00000–MC08》

标记 MARK	处数 NUMBER	分区 SUBAREA	更改文件号 REDOCUMENT	签名 NAME	日期 DATE	标记 MARK	处数 NUMBER	分区 SUBAREA	更改文件号 REDOCUMENT	签名 NAME	日期 DATE

无锡苏阳化工装备有限公司 WUXI SUYANG CHEMICAL EQUIPMENT CO., LTD	工程名称： PROJECT:	3万?/年甲?装置
设计 DRAWN BY / 校核 CHECKED BY / 审核 AUDITED BY / 批准 APPROVED BY / 项目负责人 P.M.	设备位号 ITEM	E–1102
?化器出口余?器 OXIDATION HEAT EXCHANGER 装配? ASSEMBLY DRAWING	设计阶段 STAGE	???? Detail Design
	图号 DRW NO	24SY042–016–00
	版次 REV	3 日期 DATE 2025.6.14
比例 SCALE 1:10 图幅 DIMENSION A1	第 1 张 PAGE	共 1 张 TOTAL

?? MARK	???? EXPLANATION	?? MODIFY	?? CHECK BY	?? REVIEW BY	?? DATE