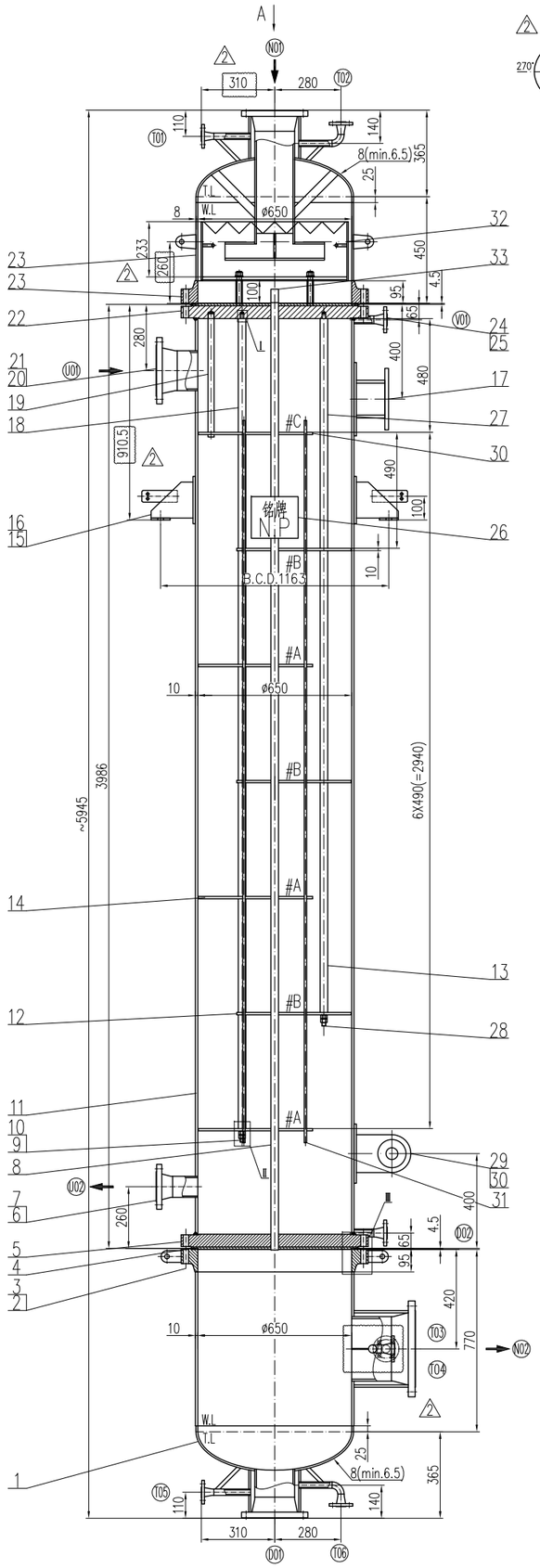

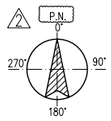

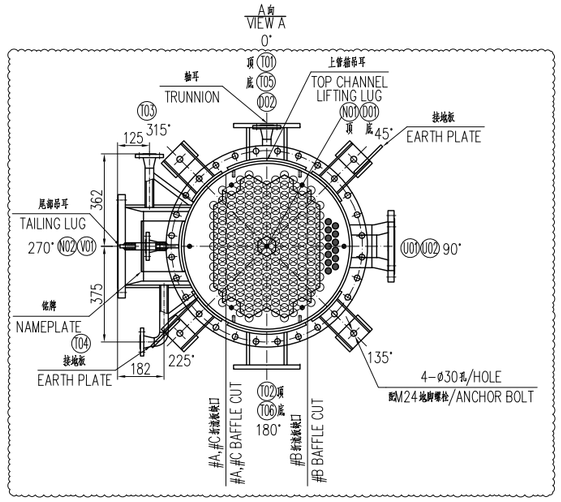

换热管和管板连接详图
DETAIL OF TUBE TO TUBESHEET JOINT
不按比例/NO SCALE

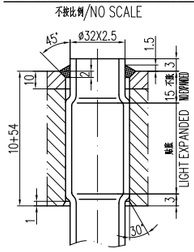

换热管布置详图
DETAIL OF TUBE LAYOUT
不按比例/NO SCALE

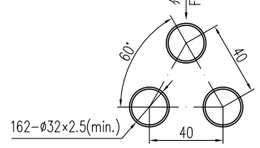

防冲杆布置详图
DETAIL OF IMPINGEMENT RODS LAYOUT
不按比例/NO SCALE

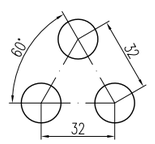

防冲杆连接详图
DETAIL OF IMPINGEMENT RODS
不按比例/NO SCALE

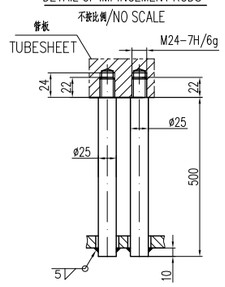

管板与筒体焊接详图
WELDING DETAIL OF TUBESHEET WITH SHELL
不按比例/NO SCALE

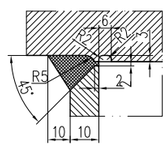

A、B类焊接接头
DETAIL OF BUTT WELD
不按比例/NO SCALE

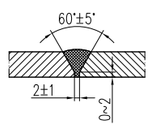

接管与壳体焊接详图
WELDING DETAIL OF NOZZLE TO SHELL
不按比例/NO SCALE

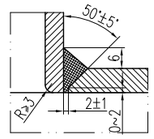

螺栓安装详图
DETAIL FOR INSTALLING OF JACK BOLT
不按比例/NO SCALE

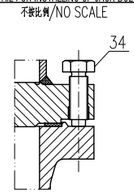

I
不按比例/NO SCALE

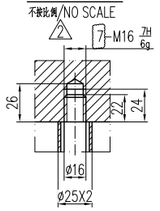

II
不按比例/NO SCALE

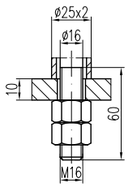

III
不按比例/NO SCALE

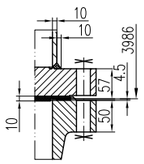

管口V01,D02与接管焊接详图
WELDING DETAIL OF V01,D02 TO NOZZLE
不按比例/NO SCALE

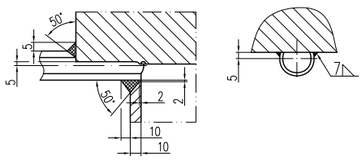

旁路挡板连接详图
DETAIL OF BYPASS SEAL PLATE
不按比例/NO SCALE

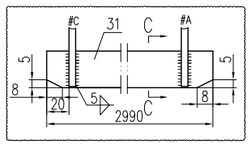

C-C
不按比例/NO SCALE

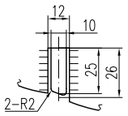

技术特性表
TECHNICAL DATA

标准、法规 CODE & STD	1.《压力容器》GB/T 150.1~150.4-2024 PRESSURE VESSELS 2.《热交换器》GB/T 151-2014 HEAT EXCHANGER

设计参数 DESIGN DATA	壳程 SHELL SIDE	管程 TUBE SIDE	夹套 JACKET
容器类别 VESSEL CATEGORY	/		
换热器管束级别 H. E. TUBE BOUNDLE CLASS	I		
换热器型号 HEAT EXCHANGER TYPE	BEM 650-6.5/FV-6.2/FV-63-4-32-II		
换热器程数 NUMBER OF PASSES	1	1	–
工作压力 OP. PRESSURE kg/cm2 G	4.08	3.06	4.5
设计压力 DESIGN PRESSURE kg/cm2 G	6.2/ FV	6.5/ FV	7.0
工作温度(入口/出口) OP. TEMP.(IN/OUT) ℃	151.93/151.91	102.53/108.03	70
设计温度 DESIGN TEMP. ℃	230	160	120
金属壁温 METAL TEMPERATURE ℃	151.92	141.6	–
最大允许工作压力 MAWP kg/cm2 G	/	/	/
最低设计金属温度 MDMT ℃	0		
物料名称 FLUID NAME	0.4MPaG steam	Water,HPA	Water
物料密度 FLUID DENSITY Kg/m3	2.67/914.99	907.99 1.09/904.2	1000
毒性程度 FLUID HAZARD 壳程 SHELL SIDE	□易爆 EXPL. □极度 EXTREME □高度 HIGH □中度 MIDDLE □轻度 LIGHT		
毒性程度 FLUID HAZARD 管程 TUBE SIDE	☑易爆 EXPL. ☑极度 EXTREME □高度 HIGH □中度 MIDDLE □轻度 LIGHT		
毒性程度 FLUID HAZARD 夹套 JACKET	□易爆 EXPL. □极度 EXTREME □高度 HIGH □中度 MIDDLE □轻度 LIGHT		
腐蚀裕量 CORROSION ALLOWANCE mm	3	0	0
焊接接头系数 JOINT EFFICIENCY 筒体/封头	0.85/-	1.0/1.0	1.0/-
地震设防烈度 SEIS. INT.	7度	基本风压 DESIGN WIND PRES.	400 Pa
设计地震分组 SEISMIC USE GROUP	第三组	地面粗糙度类别 DYFOSURE CATEGORY	A类
设计基本地震加速度 EARTHQUAKE ACCELER.	0.15g	场地土类别 SITE CLASS	III类
全容积 TOTAL VOLUME m3	0.77	0.83	0.1
传热面积 HEAT TRANSFER AREA m2	63		
换热管外径/壁厚/管长 TUBE O.D./THICKNESS/LENGTH	Ø32X2.5(MIN.)X4000		
换热管间距/排列方式 PITCH/ARRANGEMENT	40/30°		
管子与管板连接 TUBE TO TUBESHEET JOINT	强度焊+贴胀 STRENGTH WELD+EXPANDED		
焊后热处理要求 REQ. FOR PWHT	不要/NO	不要/NO	不要/NO
安全阀整定压力 SAFETY VALVE ACT PRESSURE kg/cm2 G	/	/	/
保温层类型/厚度 INSULATION TYPE/THICKNESS	硅酸铝/100 Alumina silicate blanket	硅酸铝/80 Alumina silicate blanket	硅酸铝/80 Alumina silicate blanket
设计寿命 DESIGN LIFE YEAR	15		

焊接材料及型号 WELDING MATERIAL & TYPE	NB/T47018.1~3&5-2017 NB/T47018.4-2022
焊接规程 WPS	按照 NB/T47015-2023 As per NB/T47015-2023
涂敷与包装运输要求 REQ. FOR COAT.PACK.&TRANS.	见其它要求和说明 See Other requirements & Notes
承用的其它标准 OTHER APPLIED STD	见其它要求和说明 See Other requirements & Notes
焊接接头的要求 REQ. FOR WELD JOINT	A、B、C、D类为全焊透结构 Full penetration for Cat.A,B,C,D
焊接接头的形式及尺寸 THE TYPE & SIZE OF WELD JOINT	按照 HG/T20583-2020 As per HG/T20583-2020
法兰的焊接要求 REQ. FOR WELD OF FLANGE	按照相关法兰标准 As per corresponding flange standard
角焊缝的要求 REQ. FOR FILLET	见其它要求和说明 See Other requirements & Notes
管板密封面与壳体轴线垂直度公差 DEVIATION OF TUBESHEET SEALING FACE TO SHELL AXIS	1mm
未注尺寸/角度公差等级 DIMENSION TOLERANCE GRADE NOT NOTED	按HG/T 20584-2020第14节 As per article 14 of HG/T 20584-2020
管口方位 NOZZLE ORIENTATION	按本图 As per this drawing

无损检测 NDE

	焊接接头 WELD JOINT	检测方法及技术等级 INSPECTION METHOD AND TECHNOLOGY GRADE	检测比例 INSPECTION PERCENTAGE	合格级别 QUALIFIED GRADE
壳程 SHELL SIDE	A.B类	☑射线 R.T. ☑AB □B	□ 100% ☑ >20%	□ II ☑III
		□超声 U.T.(可记录,RECORDABLE) □B □C	□ 100% □ >20%	□ I □II
		衍射时差法超声 TOFD	□ 100% □ >20%	□ I □II
	☑C类	☑磁粉 M.T.	100%	I
	☑D类	渗透 P.T.	100%	I
	☑E类	渗透 P.T.	100%	I
管程 TUBE SIDE	A.B类	☑射线 R.T. ☑AB □B	□ 100% □ >20%	☑ II □III
		□超声 U.T.(可记录,RECORDABLE) □B □C	□ 100% □ >20%	□ I □II
		衍射时差法超声 TOFD	□ 100% □ >20%	□ I □II
	☑A,B类	磁粉 M.T.	100%	I
	☑C类			
	☑D类	☑渗透 P.T.	100%	I
	☑E类			
管子与管板的焊接接头 T.-TO-T.S. JOINT		□磁粉 M.T. ☑渗透 P.T.	100%	I

试验 TEST

	液压试验压力 kg/cm2 G HYDRO. TEST PRESSURE	气压试验压力 kg/cm2 G PNEUMATIC TEST PRESSURE	泄漏试验压力 kg/cm2 G LEAKAGE TEST PRESSURE
壳程 SHELL SIDE	8.5	/	/
管程 TUBE SIDE	9.3	/	1.03/氦检漏 Helium eak detection
夹套 JACKET	9.8	/	/

制造质量 FABRICATION WEIGHT	Kg	3026
空重 EMPTY WEIGHT	Kg	3200
设备的操作质量 OPERATION WEIGHT	Kg	4658
充满水后的质量 WEIGHT OF FULL OF WATER	Kg	4800

管口表 NOZZLES LIST

符号 MARK	公称直径 NPS	公称压力 CLASS	连接标准 CONNECTING STD.	法兰型式/密封面 FLG.TYPE/S.F.	设备中心线或封头切线至法兰密封面距离 FROM VESSEL C.LOR HEAD T.L TO SEALING FACE OF FLANGE	用途 SERVICE	备注 REMARK
N01	6"x8"	150#	SH/T 3426-2014	WN/RF	见图/SEE DWG	工艺入口 Liquid inlet	
N02	10"x14"	150#	SH/T 3426-2014	WN/RF	595	工艺出口 Vapor outlet	
U01	6"	150#	ASME B16.5-2020	WN/RF	500	蒸汽入口 Steam inlet	
U02	3"	150#	ASME B16.5-2020	WN/RF	500	冷凝出口 Condensate outlet	
V01	1"	150#	ASME B16.5-2020	WN/RF	475	排气口 Vent	
D01	6"x8"	150#	SH/T 3426-2014	WN/RF	见图/SEE DWG	排净口 Drain	
D02	1"	150#	ASME B16.5-2020	WN/RF	475	排净口 Drain	
T03,T04	1"	150#	ASME B16.5-2020	WN/RF	见图/SEE DWG	N02连接口 N02connection	
T01,T02 T05,T06	3/4"	150#	ASME B16.5-2020	WN/RF	见图/SEE DWG	N01,D01连接口 N01,D01connection	

管口载荷表 NOZZLES LOADS LIST

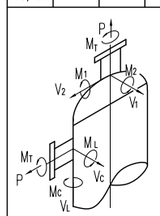

NOZZLE	DN	FORCES (UNIT: kN) P	VL / V1	Vc / V2	MOMENTS (UNIT: kN-m) ML / Mt	Mc / M2	MT
D01,N01	150x200	7.2	7.2	5.4	2.808	2.16	3.24
U01	150	7.2	7.2	5.4	2.808	2.16	3.24
N02	250x300	12.0	12.0	9.0	7.8	6.0	9.0
U02	80	3.6	3.6	2.7	0.702	0.54	0.81

版次/REV.	版次说明/DESCRIPTION	设计/PREPARED	校核/REVIEWED	审核/APPROVED	日期/DATE
5					
4					
3					
2	供审查/FOR APPROVAL	秦天浩	陈睿	孙守巍	2025/5/5
1	供审查/FOR APPROVAL	秦天浩	陈睿	孙守巍	2025/4/15
0	供审查/FOR APPROVAL	秦天浩	陈睿	孙守巍	2025/3/26

本图纸版权为无锡化工装备股份有限公司财产,未经本公司许可不得转让或发制给第三方.
The copyright of this drawing is the property of China Wuxi Chemical Equipment Co.,Ltd.(WCE), unauthorized disclosure or duplication to the third party is not permitted.

无锡化工装备股份有限公司
WUXI CHEMICAL EQUIPMENT CO., LTD.

设计项目 DESIGN PROJECT	印尼路易斯安纳乌里万诺/甲醛高二期项目 PT PETRO ORO INDONESIA 30000 TPA MFG PROJECT	
设计阶段 DESIGN PHASE	施工图 FOR CONSTRUCTION	
工作令号 WORK NO	WHA25-033-1	
设备位号 ITEM NO.	E-2201	
图号 DRAWING NO.	WXCE8260-00-I	
比例 SCALE	1:12	
版次 REV.	/	
第 1 页 共 6 页 PAGE 1 OF 6		

设计 PREPARED
校核 REVIEWED
审核 APPROVED
批准 AUTHORIZED

醛回收塔再沸器
Aldehyde recovery tower reboiler
装配图 I
GENERAL ASSEMBLY DWG. I

图纸目录 DRAWING LIST

图号 DRAWING NO.	名称 DRAWING NAME	图号 DRAWING NO.	名称 DRAWING NAME
WXCE8260-00-I	装配图I GA DRAWING I	WXCE8260-03	零部件图 3 PART DRAWING 3
WXCE8260-00-II	装配图II GA DRAWING II	WXCE8260-04	零部件图 4 PART DRAWING 4
WXCE8260-01	零部件图 1 PART DRAWING 1		
WXCE8260-02	零部件图 2 PART DRAWING 2		

其它要求和说明/Other requirements & Notes

1.一般要求/General requirements

1.1 除非另外说明，所有尺寸单mm表示。

All dimensions are in mm unless otherwise specified.

1.2 螺纹尺寸及其公差分别按GB/T 196-2003和GB/T 197-2018的规定。

Dimensions of screw thread and its tolerance shall be separately as per GB/T 196-2003 and GB/T 197-2018.

1.3 除非另外说明，法兰的螺栓孔布置应按容器水平--垂直轴线跨中布置。（见图一）

Unless otherwise indicated, flange bolt shall straddle horizontal and vertical axis of vessel. (See Figure 1)

1.4 法兰密封面（管口，设备法兰及管板）粗糙度为Ra3.2μm ~ Ra6.3μm，且应为锯齿状同心面或螺旋面。

Gasket surface (nozzles, flanges and tubesheets) finishing shall be 3.2 ~ 6.3 μm. All flange sealing faces serrated concentric or spiral finish.

1.5 除图中注明外零件机械加工表面线性尺寸的极限偏差按GB/T 1804-2000第m级精度，非机械加工表面线性尺寸的极限偏差按GB/T 1804-2000第C级精度。

Unlees noted, linearity dimension tolerance of machined surface & unmainched surface shall be separately as per correspond to grade m & c of GB/T1804-2000.

2. 材料/Material.

材料/Material.

2.1 受压元件材料应符合TSG 21-2016第2条和GB 150.2-2024相关规定。

The materials of pressure-bearing part shall be as per the relevant requirements GB 150.2-2024 and Article 2 of TSG 21-2016.

2.2 受压元件材料牌号、标准和使用状态如下:

The following is designation, standard and application condition material of pressured part :

板材/Plate :

S31603, GB/T 713.7-2023，固溶/Solution;

Q345R,GB/T 713.2-2023，热轧/not rolling

管材/Nozzle:

Q345D , GB/T 6479-2013，正火/Normalizing;

S31603,GB/T 14976-2012,固溶/Solution

锻件/FORGING:

S31603III NB/T 47010-2017，固溶/Solution;

16MnIII NB/T47008-2017,正火/Normalizing

还应符合NB/T 47010-2017和NB/T47008-2017 III级锻件的相关要求。

It should also comply with the relevant requirements for Class Ⅲ forgings in NB/T 47010-2017&NB/T 47008-2017.

S31603锻件应提供提供晶粒度检测结果，且应按NB/T 47013.5-2015进行100%渗透检测，合格等级Ⅰ级。

The S31603 forgings shall provide grain size inspection results and undergo 100% penetrant testing in accordance with NB/T 47013.5-2015,
with the acceptance criteria meeting Grade I.

换热管/Tube:

无缝换热管：S31603,GB/T 13296-2023，固溶，高级冷拔管，最小壁厚次管，不允许拼接，且满足NB/T 47019.1~NB/T 47019.9-2021中Ⅰ级换热管的要求。

Seamless tube: S31703,GB/T 13296-2023，solution-annealed,precision cold-drawn tubes with minimum wall thickness,strictly free from splicing, and shall meet the requirements for Grade I heat exchanger tubes specified in NB/T 47019.1~47019.9-2021.

2.3 换热管应逐根进行超声检测，水压试验和涡流检测，水压试验压力按标准规定。其余检验项目应符合GB/T 13296及NB/T47019.1~47019.8中的相关规定。换热管试验合格后，检测盲区应切除，切口端面应光滑，无毛刺及裂纹缺陷。

Each heat exchange tube shall be subjected to ultrasonic testing, hydrostatic test and eddy current test respectively. The hydrostatic test pressure shall be in accordance with the standard provisions. Other inspection items shall conform to the relevant regulations in GB/T 13296 and NB/T47019.1 - 47019.8. After the heat exchange tube passes the test, the detection blind zone shall be removed. The cut end face shall be smooth, without burrs and crack defects.

2.4 S31603/S31703 材料及其焊接接头(包括焊接工艺评定、产品焊接试件)按GB/T 4334-2020 方法B进行晶间腐蚀试验，平均腐蚀速率应不大于1.6g/m2·h，腐蚀试件取样和组批应按GB/T21433-2008第8条规定进行。

The S31603/S31703 materials and their welded joints (including welding procedure qualification and product welding specimens) shall undergo intergranular corrosion tests according to Method B of GB/T 4334-2020. The average corrosion rate shall not be greater than 1.6 g/(m²·h). The sampling and lot formation of corrosion specimens shall be carried out in accordance with Article 8 of GB/T 21433-2008.

2.5 Q345R板材应进行0℃的冲击试验。3个标准试样的冲击功平均值应不小于24J，允许其中一个试样的冲击功低于平均值24J，但不得低于70%的平均值。

For materials Q345R, the impact test should be performed at 0℃. The average impact energy value of three standard specimens must be not less than 24J. One of standard specimens less than specified value (not less than 70% of the specified value) is allowable.

2.6 16MnIII锻件应进行0℃的冲击试验。3个标准试样的冲击功平均值应不小于24J，允许其中一个试样的冲击功低于平均值24J，但不得低于70%的平均值。

For materials 16Mn, the impact test should be performed at 0℃. The average impact energy value of three standard specimens must be not less than 24J. One of standard specimens less than specified value (not less than 70% of the specified value) is allowable.

3. 制造与检验/Fabrication and inspection

3.1 公称直径小于250mm的接管与法兰、接管与高颈法兰的对接焊接接头应全部进行100% MT/PT检测，并符合NB/T 47013.4/5-2015中的Ⅰ级

For pressure vessel nozzles with nominal diameter less than 250 mm , the butt welded joints should be examined by 100% MT/PT, and accepted as per grade I of NB/T 47013.4/5-2015.

3.2 吊耳与筒板及筒板与壳体的焊缝表面应进行100% MT/PT检测，符合NB/T 47013.4/5-2015中Ⅰ级。

The welds for lifting lug to shell shall be examined by 100% MT/PT in acc. with NB/T 47013.4/5-2015, grade I.

3.3 除要求伸出内表面的接管外，其余接管应打磨至与壳体内表面齐平，其内端倒圆应打磨至显不小于R3的圆角。

Except nozzles required to protrude beyond the inside surface, the end of nozzles of other nozzles shall be ground flush to the inside curvature of shell and with a radius 3mm(min.) rounded corner.

3.4 换热管与管板分两道焊接，两道焊缝均应应做开180°，第一层焊接完成后应对焊接接头进行空气泡沫气密性试验，试验压力为0.1MPa(ga)，合格后再进行100%PT检测。检测均合格后焊第二层。第二层PT合格后再进行胀管，胀管完成后再进行100%PT检测。强度焊应采用100%自动焊接工艺。第一道焊接和第二道焊接均应使用填丝GTAW（TIG）工艺。胀接应是液压胀，管子管板胀接后不得有缝隙。

Tube-to-tubesheet joints shall be welded in two welding layers, the start arc welding point for layer shall be stagger 180 degree, and after the first layer of welding is completed, layer shall be examined by air leakage test with 172 kPa(ga) & 100%PT. After all inspections are qualified, the second layer shall be welded. After the second layer PT is qualified,tube expansion should be performed, and 100% PT shall be performed again after expansion. Strength welds shall be using 100% automatic welding process.The 1st and 2nd passes both shall be filler added using the GTAW (TIG) process..The expansion joint should be hydraulic expansion. There should be no gaps after the expansion of the tube sheet.

3.5 管头应焊前应按NB/T 47014-2023附录E（换热管与管板焊接工艺评定）进行焊接工艺评定，焊接层数不少于2层，每层焊后均应按NB/T 47013.5-2015 进行100%渗透检测，Ⅰ级合格。

Before Tube-to-tubesheet joints welding, the welding procedure qualification shall be carried out in accordance with Annex E "Welding Procedure Qualification for Heat Exchange Tubes and Tube Sheets" of NB/T 47014 - 2023. The number of welding passes shall be no less than 2. After each pass of welding, 100% PT shall be carried out in accordance with NB/T 47013.5 - 2015, and accepted as per grade I .

3.6 纵向及环向焊接接头应尽可能避开接管开孔。补强圆和支座垫板等。如果焊缝被补强圆或支座垫板覆盖，应得同天方的缺陷，并应在焊接补强圆或支座垫板前，对壳体焊缝打磨平齐，并对所覆盖的焊缝全长进行射线检测。

Longitudinal and circumferential welded seams shall not interfere with nozzle openings, reinforcement plates and support pads, as far as possible. If the seams are covered by reinforcement plates or support pads under Purchaser's approval, these should be ground flush with shell surface and radiographic examined in full length prior to welding of plates or pads.

3.7 相邻筒体上的纵向焊缝间距应大于较厚板壁厚的5 倍且不小于150mm。

Longitudinal joints shall be offset between courses by not less than five times the plate thickness or 150mm, whichever is greater.

3.8 纵向及环向焊缝应尽可能布置在距离接管至少2.5*(R*t)$^{0.5}$mm。

Longitudinal and circumferential seams shall be located to clear nozzle welds for at least 2.5*(R*t)$^{0.5}$mm .

3.9 公称直径小于DN250时，接管应采用无缝钢管或锻件加工。公称直径大于等于DN250时，接管可以采用卷制或锻件加工，纵向焊缝要求进行100% RT，并符合NB/T 47013.2-2015标准中 II级要求。

Nozzle shall be seamless nozzle or integrated forging when the nozzle size is smaller than DN250. For the nozzle size equal or bigger than DN250, it's accepted to adopt the nozzle made in plate or forging, but 100% RT in according with NB/T 4701.3.2-2015 gradeⅡis required if welding.

3.10 奥氏体不锈钢冷成形件成形后的外表面硬度<235HB不需应进行固溶热处理。奥氏体不锈钢热加工件应进行固溶处理。

The internal and external surface hardness of austenitic cold forming part should be <235HBW,otherwise solid solution shall be performed. The hot made parts of austenite stainless steel shall be solid solution.

3.12 封头不允许拼接，封头采用冲成形，封头成形后应进行固溶处理，封头硬度<235HB。封头带热处理试板。

Splicing of the head is not allowed, and the head is cold formed.After forming, the head should undergo a solution heat treatment, with a hardness of <235HB.

The heads shall be with heat treatment test coupon.

3.13 降膜分布器应在工厂进行装配试验，并通知买方见证。

The falling film distribution tube shall be assembled and tested in the factory, and the buyer shall be notified to witness it.

3.14 管板公称直径>250mm的插入式或全嵌式接管与筒体或封头之间的焊接接头应100%RT或UT。

The welded joints between the inserted or built-in nozzles with a nominal diameter of the tube side of > 250 mm and the cylinder or the head shall be subjected to 100% RT (Radiographic Testing) or UT (Ultrasonic Testing).

3.15 管板A类纵向焊缝应制备产品焊接试板。

The product welding test plote shall be prepared for the type A longitudinal weld of the tube side.

4. 焊接/Welding.

4.1 焊接工艺应符合NB/T47014-2023和NB/T47015-2023的规定。

The welding procedure shall be as per the requirements of NB/T 47014-2023 and NB/T 47015-2023.

4.2 承压对接焊接接头，应采用全截面焊焊接头形式。

Pressure retaining butt welded joints shall be full penetration weld..

4.3 对接焊缝应清根后焊接，不能清根时应采用氩弧焊打底。

All butt welded joints shall be back chipped & rewelded. Wherever back chipping is not possible root run shall be welded by TIG or GTAW.

4.4 未注角焊缝焊脚高度为较薄板厚度。

The fillet weld height not demensioned shall be equal to the thickness of thinner plate.

4.5 除特别说明外，所有焊缝均为连续焊。

Unless specified, all welds shall be continuous.

4.6 壳体不应进行圆筒形周向焊接接头，以及接管与壳体的角接接头，须采用氩弧焊打底，工艺保证全焊透。

Circumferential welded joints that cannot undergo radiographic testing on the shell, as well as corner joints between the connecting pipe and the shell, must be bottomed with argon arc welding to ensure full penetration.

4.7 壳体与管板的最后一道焊缝氩弧焊打底，并应进行100%PT。

The last weld seam between the shell and the tube plate should be bottomed with argon arc welding and subjected to 100% PT.

4.8 与工艺介质接触的 S31603/S31703 材料焊缝应采用氩弧焊盖面且保持焊态。

The welds of S31603/S31703 materials in contact with process media shall be clad with argon arc welding and maintained in the as-welded condition

5. 水压试验与泄漏试验/Hydro-test and Leakage test.

5.1 奥氏体材料接触试验用水时，水中氯离子含量应不超过 25 mg/L。

When austenitic stainless steel material is exposed to test water, chloride content of water shall be no greater than 25 mg/L.

5.2 液压试验压力值应在检查员在场的情况下至少保持一小时。

The hydraulic test pressure value shall be maintained for one hour at least, in the presence of the inspector.

5.3 水压试验用垫片应使用正式垫片。

Service gaskets shall be used for hydrostatic test.

5.4 试验合格后应当立即将水液去除干净，并采用压缩空气将容器内部吹干。

After hydro tesing, the water stain should be cleaned and the container will be blown dry by compressed air.

5.5 管程水压试验合格后按NB/T 47013.8-2012附录E（氦质谱仪法露检测）示踪探头技术进行氦检漏试验。

The tube side shall undergo helium leakage testing according to Appendix E of NB/T 47013.8-2012 using the sniffing probe detection method after hydrotest.

5.6 水压试验前，所有检漏孔应通入0.4~0.5MPa的压缩空气以检查焊接接头的质量。

Before the hydraulic test, all leak detection holes should be filled with compressed air of 0.4~0.5MPa to check the quality of the welded joints.

6. 表面处理/Surface Treatment

6.1 设备不锈钢部分: 内外表面进行酸洗钝化; 并采用蓝点法检查，无蓝点为合格。

For S.S, parts: The inner & external surface should be pickling and passivation,and the passivated surface shall be examined by using blue-point penetration method, no blue-point is accepted.

6.2 涂漆前，设备碳钢外表面应进行除锈，除锈后的钢材表面至少达到 GB/T8923 中的 Sa2.5 级要求，设备表面处理和涂漆按照项目的统一规定 22150-000000-MC08《涂漆与防腐设计规定》执行。

Before painting, the external carbon steel surface of the equipment shall be derusted. The derusted steel surface shall meet at least the requirements of Sa2.5 grade in GB/T 8923. The surface treatment and painting of the equipment shall be carried out in accordance with the unified project regulations 22150 - 000000 - MC08 "Painting and Anti-corrosion Design Specifications".

6.3 表面处理后涂漆施工前，应通知买方有关人员参加检查，并签署隐蔽工程质量检查确认单。

After surface treatment and before painting construction, the relevant personnel of the buyer shall be notified to participate in the inspection and sign the concealed engineering quality inspection confirmation form.

7. 包装/Packing

7.1 所有机加工零件（包括法兰密封面）应采用合适的材料和方法进行保护。

All machined parts (including flange sealing surfaces) should be protected using suitable materials and methods.

7.2 对设备内部和外部进行全面检查并确认:

Conduct a comprehensive inspection and confirmation of both the inter and exter of the equipment.

a)设备内表面应保证完整、光滑、无污垢及其它杂质。

The coating on the inner surface of the equipment shall be intact, smooth, free of dirt and other impurities.

b)设备内部检查确认合格后，应立即对设备进行充分的干燥，并按规定采用由钢板制作的盲板以及垫片、紧固件(螺栓至少4个)对所有开孔进行密封保护，通免运输和存放过程中潮湿空气进入设备内部。

After the internal inspection of the equipment is confirmed to be qualified, the equipment shall be thoroughly dried immediately. And in accordance with the regulations, use blind plates made of steel plate as well as gaskets and fasteners (at least 4 bolts) to seal and protect all openings to prevent moist air from entering the interior of the equipment during transportation and storage.

7.3 项目编号、采购订单编号和运输重量应以100mm高的字体显著标记在换热器上。

The item number, purchase order number, and shipping weight shall be prominently marked on the exchanger in 100 mm high lettering.

7.4 所有设备和零部件包装箱均应按包装说明标记出项目号和设备位号，并应标记出重心和设备壳体中心线。

All equipment and component packing cases shall be marked with the project number and equipment tag number in accordance with the packaging instructions, and the center of gravity and the centerline of the equipment shell shall also be marked.

7.5 换热器内部充0.05MPa氮气密封保护并带压力表。各开口接管均应用钢板盲、螺栓、螺母、垫片密封，在容器的管口上至少安装压力表两块。(管壳程各一块)

Internal protection for shipment by Nitrogen filling with manometer. Each nozzle should be sealed with a steel plate cover, bolts, nuts, and gaskets. Install at least two pressure gauges on the nozzle of the heat exchanger. (Each one for tube and shell side)

7.6 所有需要客户安装的内外零部件应装入木箱中（应有防水设施）。木箱应能保护所有部件在运输中不受损坏，且适合在工作现场室外储存 6 个月以上。所有包装箱应有详细的标记和装箱清单。

All internal and external accessories installation On-site(if any) shall be fitt ed in wooden boxes (waterproofing facilities shall be added). Wooden box should be abl e to protect all parts in the transport without damage, and suitable for outdoor stora ge in the work site for more than 6 months. All packing boxes should have detailed mar king and packing list

7.7 备品备件应单独包装。

Spare parts should be separately packaged.

7.8 设备的运输包装其它要求应符合NB/T10558-2021 的规定。

In addition, the coating and packaging for equipment transport shall conform to the NB/T10558-2021.

7.9 立式容器应有0°方位标记，0°方位标记应采用不影响钢材质量的油漆书写。

Vertical containers should have a 0 ° orientation mark, which should be written with paint that does not affect the quality of the steel.

7.10 运输中设备仪表口处垫片应采用临时垫片，仪表安装用垫片应单独包装随设备运至现场。

During transportation, temporary gaskets shall be used at the instrument ports of the equipment, and the gaskets for instrument installation shall be separately packaged and transported to the site along with the equipment.

8. 其他/Others

8.1 备品备件/spare parts

7.1 试车、安装所需备件:

7.1.1 设备法兰和带盲盖的法兰各配2套垫片

2 set of spare gaskets for the main and blind flanges in vendor's scope

7.1.2 紧固件（螺栓 & 螺母）：最少10%（每种规格和材料类型不少于4套）。

All bolts & nuts: minimum 10% (4 minimum for each size and material type).

7.2 两年操作所需的备件(不供货)：

Spare parts for two years of operation (by other):

7.2.1 设备法兰和带盲盖的法兰各配2套垫片

2 set of spare gaskets for the main and blind flanges in vendor's scope

7.2.2 紧固件（螺栓 & 螺母）：最少10%（每种规格和材料类型不少于4套）。

All bolts & nuts: minimum 10% (4 minimum for each size and material type).

8.2 设备的安全泄放装置在系统中设置。

The device's safety discharge device is set in the system.

图1/Fig. 1

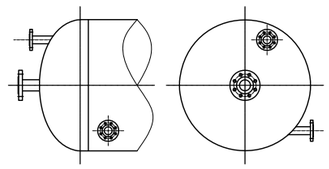

项丝详图

DETAIL OF JACK BOLT

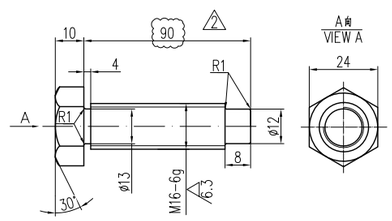

接地板详图

DETAIL OF EARTH PLATE

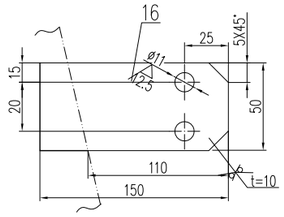

件号 PART NO.	图号或标准号 DWG. OR STD. NO.	名称 DESCRIPTION	数量 QTY.	材料 MATERIAL	单件EACH 重量	总计SUM WT.(kg)	备注 REMARK
34	见本图 SEE DRAWING	顶丝 JACK BOLT ⚠2	8	S30408	0.4	3.2	
33		支限头 FILM SPREADING HEAD	162	S31603	/	/	
32	WXCE8260-04	分布盘 DISTRIBUTION PLATE	1	组合件 ASSEMBLY		60.9	
31		旁路挡板 BYPASS SEAL PLATE	4	Q345R	6.0	24	
30	WXCE8260-02	折流板 #C BAFFLE	1	Q235B		13	
29	WXCE8260-03	尾部吊耳 TAILING LUG	1	组合件 ASSEMBLY		7.6	
28	WXCE8260-03	拉杆 ø16 L=3010 TIE ROD	1	Q235B		4.7	
27		定距管 ø25X2 L=970 SPACER	1	20		1.8	
26	WXCE8260-03	鞍座及支架 N.P. & BRACKET	1	组合件 ASSEMBLY		4.0	
25		接管 ø33.7X4.5 PIPE	2	Q345D	0.3	0.6	V01,D02
24	ASME B16.5-2020	法兰 WN 25-150# RF Sch80 FLANGE	2	16MnⅢ	1.1	2.2	V01,D02
23	WXCE8260-01	上管箱 TOP CHANNEL	1	组合件 ASSEMBLY		196	
22	WXCE8260-02	上管板 TOP TUBESHEET	1	16MnⅢ锻件S31603		181	
21		接管 ø168.3X7.1 PIPE	1	Q345D		4.2	U01
20	ASME B16.5-2020	法兰 WN 150-150# RF Sch40 FLANGE	1	16MnⅢ		11.8	U01
19	WXCE8260-02	防冲挡杆 ø25 L=522 IMPINGEMENT ROD	13	Q235B	2.1	27.3	
18		定距管 ø25X2 L=480 SPACER	36	20	0.9	31.5	
17	HG/T 21574-2018	轴式吊耳 AXA-1-5-10 TRUNNION	2	Q345R/Q345R	17.7	35.4	
16	见本图/SEE DWG	接地板 t=10 EARTH PLATE	2	S30408	1	2	
15	参照JB/T 47065.3-2018	耳式支座C2-Ⅰ SUPPORT LUG	4	Q345R/Q345R	9.0	36	δ2=10 δ3=10
14	WXCE8260-02	折流板 #A BAFFLE	3	Q235B	13	39	
13		定距管 ø25X2 L=970 SPACER	5	20	1.8	9	
12	WXCE8260-02	折流板 #B BAFFLE	3	Q235B	13	39	
11		筒体 DN650X10 L=3866 SHELL	1	Q345R		629	
10	GB/T 6170-2015	螺母 M16 NUT	14	4级	0.1	1.4	
9	WXCE8260-03	拉杆 ø16 L=3500 TIE ROD	6	Q235B	5.5	33	
8		换热管 ø32x2.5(min.) L=4000 TUBE	162	S31603	7.4	1199	
7		接管 ø88.9X5.6 PIPE	1	Q345D		0.5	U02
6	ASME B16.5-2020	法兰 WN 80-150# RF Sch40 FLANGE	1	16MnⅢ		5.2	U02
5	WXCE8260-02	下管板 BOTTOM TUBESHEET	1	16MnⅢ锻件S31603		181	
4	NB/T 47025-2012	缠绕垫片B42-650-1.0 GASKET	2	S31603+柔性石墨	/	/	
3	NB/T 47027-2012	螺母 M20 NUT	112	30CrMoA	0.2	22.4	
2	NB/T 47027-2012	螺柱 M20X180-C BOLT	56	35CrMoA	0.5	28	
1	WXCE8260-01	下管箱 BOTTOM CHANNEL	1	组合件 ASSEMBLY		301	

版次/REV.	版次说明/DESCRIPTION	设计/PREPARED	校核/REVIEWED	审核/APPROVED	日期/DATE
5					
4					
3					
2	供审查/FOR APPROVAL	秦天治	陈睿	孙守飙	2025/5/5
1	供审查/FOR APPROVAL	秦天治	陈睿	孙守飙	2025/4/15
0	供审查/FOR APPROVAL	秦天治	陈睿	孙守飙	2025/3/26

The copyright of this drawing is the property of China Wuxi Chemical Equipment Co.,Ltd (WCE), unauthorized disclosure or duplication to the third party is not permitted.
本图纸版权为无锡化工设备股份有限公司所产，未经本公司许可不得转让或复制给第三方。

无锡化工装备股份有限公司 WUXI CHEMICAL EQUIPMENT CO., LTD.

设计 PREPARED		醛回收塔再沸器 Aldehyde recovery tower reboiler 装配图Ⅱ GENERAL ASSEMBLY DWG.Ⅱ	设计项目 DESIGN PROJECT: 年乳酸及多羟基酸3万吨/年聚乙二醇酯酸 PT.FCTRO 3KO MOUNTAINA 30000 TPA MPG PROJECT
校核 REVIEWED			设计阶段 DESIGN PHASE: 施工图 FOR CONSTRUCTION
审核 APPROVED			工作令号 WORK NO.: WHA25-033-1
批准 AUTHORIZED		比例 SCALE 1:12 / 版次 REV. /	设备位号 ITEM NO.: E-2201
			图号 DRAWING NO.: WXCE8260-00-Ⅱ
			第2页 共6页 PAGE 2 OF 6

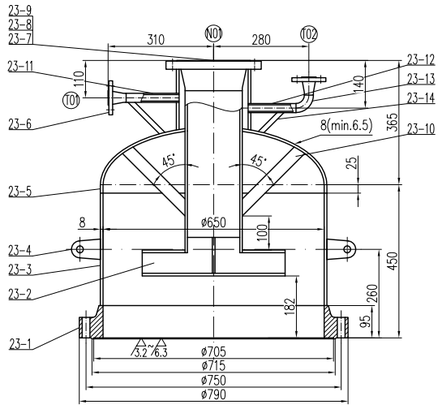

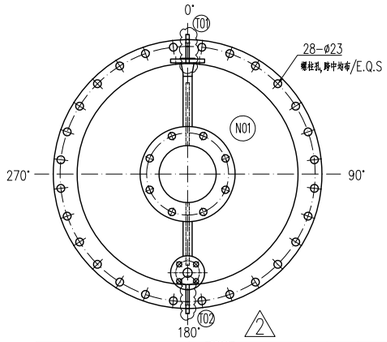

A、B夹焊接接头
DETAIL OF BUTT WELD
不按比例/NO SCALE

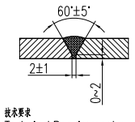

N01接管与壳体焊接详图
WELDING DETAIL OF NOZZLE N01 TO SHELL
不按比例/NO SCALE

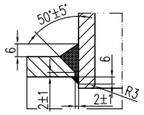

管TT01,T02鞍板连接详图
WELDING DETAIL OF RIB PLATE
不按比例/NO SCALE

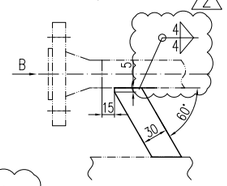

B向/VIEW "B"
不按比例/NO SCALE

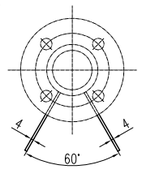

技术要求
Technical Requirements:
1.法兰螺柱孔应跨中均布.
Bolt hole of flange shall be straddle on the main axis of the vessel.
2.总耳方位按装配图I.
The orintation of Nozzles and lifting lugs see ASSEMBLY DWG I.
3.管箱吊耳仅供管箱起吊用.
Lifting lug is only for lifting channel.
4.总耳与法兰之间的连接焊缝表面应进行100% PT检测,
并符合NB/T 47013.5-2015 标准I级合格.
The fillet between lifting lugs and flange shall be examined by 100% PT as per NB/T 47013.5-2015, Class 1 is acceptable.

件号 PART NO.	图号或标准号 DWG. OR STD.	名称 DESIGNATION	数量 QTY.	材料 MATERIAL	单 EACH	总 TOTAL 重量(kg) WEIGHT	备注 REMARKS
23-14		鞍板30X4 RIB	2	S31603	0.2	0.4	
23-13	GB/T 12459-2017	90°弯头 DN20-Sch80 E(L) ELBOW	1	S31603		0.1	T02
23-12		接管 ø26.9X4 PIPE	1	S31603		0.3	T02
23-11		接管 ø26.9X4 PIPE	1	S31603		0.4	T01
23-10		鞍板30X4 RIB	2	S31603	0.7	1.4	
23-9		接管 ø219.1X8 PIPE	1	S31603		7.9	N01
23-8		接管 ø168.3X7.1 PIPE	1	S31603		13.6	N01
23-7	SH/T 3426-2014	法兰DN1500DN200-150#-WN/RF Sch40 FLANGE	1	S31603Ⅲ		11.8	N01
23-6	ASME B16.5-2020	法兰 WN 20-150# RF FLANGE	2	S31603Ⅲ	0.9	1.8	T01,T02
23-5	GB/T 25198-2023	封头EHA650X8(min.6.5) HEAD	1	S31603		32.3	
23-4	HG/T 21574-2018	吊耳P-1-0.5 LIFTING LUG	2	S31603	0.2	0.4	
23-3		筒体ØDN650X8 L=330 SHELL	1	S31603		43.4	
23-2	WXCE8260-03	分布器 DISTRIBUTOR	1	组合件 ASSEMBLY		15.3	
23-1	WXCE8260-01	设备法兰 GIRTH FLANGE	1	S31603Ⅲ		64.5	

件号 PART NO.	图号或标准号 DWG. OR STD.	名称 DESCRIPTION	数量 QTY.	材料 MATERIAL	单 EACH	总 TOTAL 重量(kg) WEIGHT	备注 REMARKS
1		下管箱 BOTTOM CHANNEL	1	组合件 ASSEMBLY	301	/	WXCE8260-01 WXCE8260-00-1

件号 PART NO.	名称 DESCRIPTION	材料 MATERIAL	重量kg WEIGHT	比例 SCALE	所在图号 LOCATED DWG. NO.	装配图号 ASSEMBLY DWG. NO.
23	上管箱 TOP CHANNEL	组合件 ASSEMBLY	196	/	WXCE8260-01	WXCE8260-00-1

其余 OTHERS 12.5

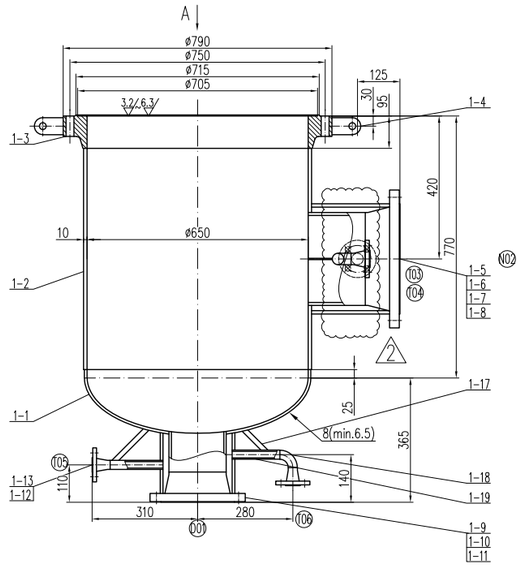

A、B夹焊接接头
DETAIL OF BUTT WELD
不按比例/NO SCALE

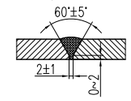

接管与壳体焊接详图
WELDING DETAIL OF NOZZLE TO SHELL
不按比例/NO SCALE

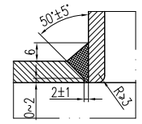

A向
VIEW A

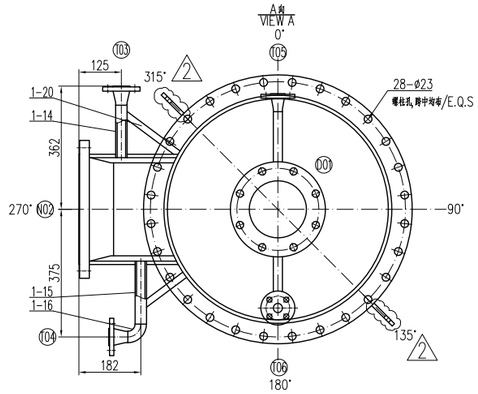

管TT01,T02鞍板连接详图
WELDING DETAIL OF RIB PLATE
不按比例/NO SCALE

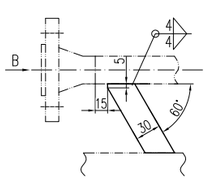

B向/VIEW "B"
不按比例/NO SCALE

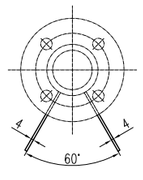

技术要求
Technical Requirements:
1.法兰螺柱孔应跨中均布.
Bolt hole of flange shall be straddle on the main axis of the vessel.
2.总耳方位按装配图I.
The orintation of Nozzles and lifting lugs see ASSEMBLY DWG I.
3.管箱吊耳仅供管箱起吊用.
Lifting lug is only for lifting channel.
4.总耳与法兰之间的连接焊缝表面应进行100% PT检测,
并符合NB/T 47013.5-2015 标准I级合格.
The fillet between lifting lugs and flange shall be examined by 100% PT as per NB/T 47013.5-2015, Class 1 is acceptable.

件号 PART NO.	图号或标准号 DWG. OR STD.	名称 DESIGNATION	数量 QTY.	材料 MATERIAL	单 EACH	总 TOTAL 重量(kg) WEIGHT	备注 REMARKS
1-20		鞍板30X4 RIB	2	S31603	0.2	0.4	
1-19		接管 ø26.9X4 PIPE	1	S31603		0.3	T06
1-18	GB/T 12459-2017	90°弯头 DN20-Sch80 E(L) ELBOW	1	S31603		0.1	T06
1-17		鞍板30X4 RIB	2	S31603	0.2	0.4	
1-16	GB/T 12459-2017	90°弯头 DN25-Sch80 E(L) ELBOW	1	S31603		0.2	T04
1-15		接管 ø33.7X4.5 PIPE	1	S31603		0.5	T04
1-14		接管 ø33.7X4.5 PIPE	1	S31603		0.6	T03
1-13		接管 ø26.9X4 PIPE	1	S31603		0.4	T05
1-12	ASME B16.5-2020	法兰 WN 20-150# RF FLANGE	2	S31603Ⅲ	0.9	1.8	T05,T06
1-11		接管 ø219.1X8 PIPE	1	S31603		7.9	D01
1-10		接管 ø168.3X7.1 PIPE	1	S31603		13.6	D01
1-9	SH/T 3426-2014	法兰DN1500DN200-150#-WN/RF Sch40 FLANGE	1	S31603Ⅲ		11.8	D01
1-8	ASME B16.5-2020	法兰 WN 25-150# RF FLANGE	2	S31603Ⅲ	1.1	2.2	T03,T04
1-7		接管 ø355.6X10 PIPE	1	S31603		18.0	N02(板卷)
1-6		接管 ø273X8.8 PIPE	1	S31603		9.2	N02
1-5	SH/T 3426-2014	法兰DN2500DN350-150#-WN/RF Sch40 FLANGE	1	S31603Ⅲ		24.5	N02
1-4	HG/T 21574-2018	吊耳P-1-0.5 LIFTING LUG	2	S31603	0.2	0.4	
1-3	WXCE8260-01	设备法兰 GIRTH FLANGE	1	S31603Ⅲ		64.5	
1-2		筒体ØDN650X10 L=650 SHELL	1	S31603		107	
1-1	GB/T 25198-2023	封头EHA650X8(min.6.5) HEAD	1	S31603		32.3	

件号 PART NO.	名称 DESCRIPTION	材料 MATERIAL	重量kg WEIGHT	比例 SCALE	所在图号 LOCATED DWG. NO.	装配图号 ASSEMBLY DWG. NO.
1-3	设备法兰 GIRTH FLANGE	S31603Ⅲ	64.5	/	WXCE8260-01	WXCE8260-01
23-1	设备法兰 GIRTH FLANGE	S31603Ⅲ	64.5	/	WXCE8260-01	WXCE8260-01

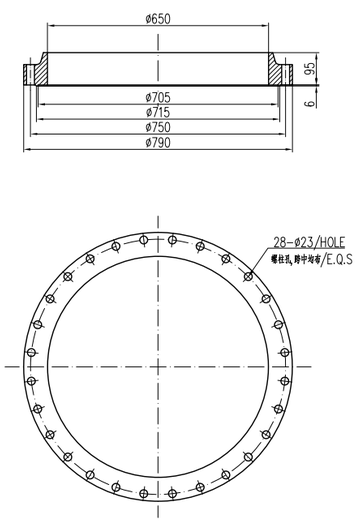

件号23-1详图
DETAIL OF PART 23-1

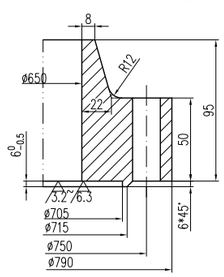

件号1-3详图
DETAIL OF PART 1-3

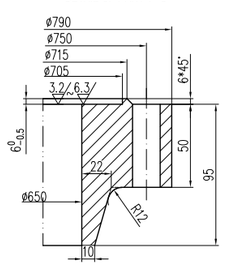

技术要求 Technical Requirements
1.锻件材料按NB/T 47010-2017中Ⅲ级要求进行制造,检验和验收.
Fabrication, inspection and acceptance for forging shall be as per NB/T 47010-2017 grade Ⅲ.
2.法兰按NB/T 47020 &NB/T 47023-2012进行制造,检验和验收.
Fabrication, inspection and acceptance for flange shall be as per NB/T 47020 & NB/T 47023-2012.
2.法兰表面不得有裂纹及其他降低法兰强度或连接可靠性的缺陷.
The surface of flange shall not have cracks and other defects which will affect the strength of flange and connection reliability.
3.螺栓孔中心圆直径和相邻两螺栓孔弦长允差为±0.6mm；任意两螺栓孔弦长允差±1.5mm.
The tolerances of the diameter of center circle of bolt holes and that of the chord between two adience bolt holes shall be±0.6mm,respectively. The tolerance between any two bolt boles shall be ±1.5mm.
4.除注明外,加工面线性尺寸的未注公差按GB/T1804-2000m级.
Unless noted, linearity dimension tolerance of machined surface shall be as per correspond to grade m of GB/T1804-2000.

件号	修改内容	设计/PREPARED	校核/REVIEWED	审核/APPROVED	日期/DATE
5					
4					
3					
2	供审查/FOR APPROVAL	秦天治	陈睿	孙守巍	2025/5/5
1	供审查/FOR APPROVAL	秦天治	陈睿	孙守巍	2025/4/15
0	供审查/FOR APPROVAL	秦天治	陈睿	孙守巍	2025/3/26
REV.	版次说明/DESCRIPTION				

未经授权复制或向第三方透露本图纸内容及设计意图,将被追究法律责任。
The copyright of this drawing is the property of China Wuxi Chemical Equipment Co.,Ltd(WCE), unauthorized disclosure or duplication to the third party is not permitted.

无锡化工装备股份有限公司
WUXI CHEMICAL EQUIPMENT CO., LTD.

设计 PREPARED		醛回收塔再沸器 Aldehyde recovery tower reboiler 零件图 I DETAIL DRAWING I	设计项目 DESIGN PROJECT: 年产2万吨/年聚甲醛装置 PF POTRO 2WT PLANT PROJECT
校核 REVIEWED			设计阶段 DESIGN PHASE: 施工图 FOR CONSTRUCTION
审核 APPROVED			工作令号 WORK NO: WHA25-033-1
批准 AUTHORIZED		比例 SCALE 1:9 / 版次 REV. /	设备位号 ITEM NO: E-2201
			图号 DRAWING NO: WXCE8260-01
			第 3 页 共 6 页 PAGE 3 OF 6

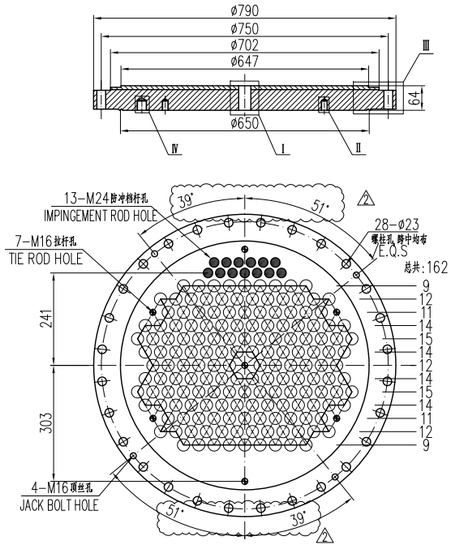

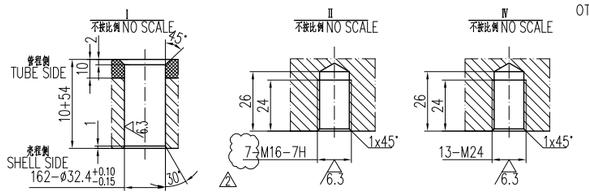

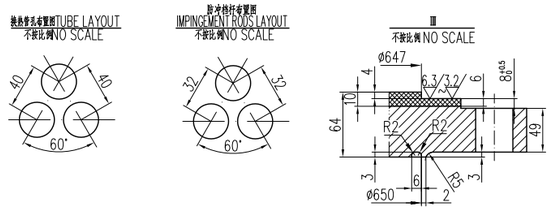

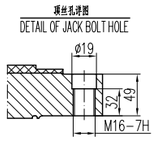

其余 OTHERS 12.5

技术要求Technical Requirements:

1.锻件16Mn Ⅲ应按照NB/T47008-2017中III级规定进行制造、检验和验收，正火状态供货，不允许拼接。
The forging 16Mn Ⅲ fabrication, inspection and acceptance for forging shall be as perNB/T47008-2017.

2.管孔应严格垂直于管板面，其垂直度允差为0.10 mm，管孔表面不允许存在贯通的纵向或螺旋条痕。
The tube holes shall be perpendicular to sealing face of tubesheet. the perpendicularity permiting deviation is 0.10 mm, and the tube holes surface shall be free of defects such as longitudinal or spiral through.

3.管板密封面应与管板轴线垂直，其垂直度允差为0.25 mm。
The sealing surface of the tubesheet shall be vertical with axis, and the vertical tolerance is 0.25 mm.

4.螺栓孔中心圆直径和相邻两螺栓孔弦长允差为±0.6 mm，任意两螺栓孔弦长允差为±1.5 mm。
The tolerance of b.c.d and chord length of two adjacent bolt holes shall be ±0.6 mm,the tolerance of two optional bolt holes shall be ±1.5 mm.

5.管板钻孔后先抽查不小于60°的管板中心角区域的管孔，允许有4%的管孔上偏差超GB/T 151-2014表6-10~6-17中的相应值，但不超出偏差的50%，不满足此要求时应100%检查。
After finnal drilling, the tube holes within the tubesheet certral angle area of no less than 60° shall be checked firstly, the deviation of 4% of the tube holes is allowed to exceed the corresponding values in Table 6-10~6-17 of GB/T 151-2014, but not more than 50% of the corresponding deviation, if it cannot meet with these requirements, it shall be done 100% inspection.

6.管板钻孔从管程侧起钻，钻孔后管板坯料（出钳）一侧表面≥96%的韧带宽度值不小于6.673mm，允许<4%的韧带宽度为4.56mm。
Drill the tubesheet from the tube side. At the tubesheet surface of drilling end side(side of drilling out),the allowable ligament width B for >96% ligament width between two adjacent tube holes shall shall be not less than 6.673mm,and the allowble min. width Bmin for <%4 ligament is 4.56mm.

7.管孔表面应清理干净，不应有影响胀接或焊接连接质量的毛刺、铁屑、锈蚀、油污等，胀接管孔表面不应有影响胀接质量的纵向或螺旋状划痕等缺陷。
There should be no burr, iron filings, rusty spot, oil, etc., effecting the quality of expanding or welding connection. The tube hole surface for expanded connections, there should be no longitudinal or spirally scorings defects, effecting the expanded quality.

8.除注明外，加工面线性尺寸的未注公差按GB/T 1804-2000 级m级。
Unless otherwise specified, the unindicated tolerance of linear dimension of machined surface shall be in accordance with grade m of GB/T 1804-2000.

9.基层材料的待特用表面和加工后的特用层表面应分别进行100%MT或PT检测并符合 NB/T 47013.4 或NB/T 47013.5-2015标准中的I级要求
The surface of the base material to be surfacing and the surface of the machined surfacing layer shall be tested for 100%MT or PT, respectively, and comply with the Level I requirements of the NB/T 47013.4 or NB/T 47013.5-2015 standard.

10.堆焊完成加工后的管板耐蚀层有效厚度(包括密封面积)不小于6mm
After surfacing and machining, the effective thickness of the corrosion-resistant layer on the tube sheet (including the sealing surface area) shall not be less than 6mm

22	上管板 TOP TUBESHEET	16Mn Ⅲ锻件S31603	181	/	WXCE8260-02	WXCE8260-00-1
件号 PART NO.	名称 DESCRIPTION	材料 MATERIAL	重量kg WEIGHT	比例 SCALE	所在图号 LOCATED DWG. NO.	装配图号 ASSEMBLY DWG. NO.

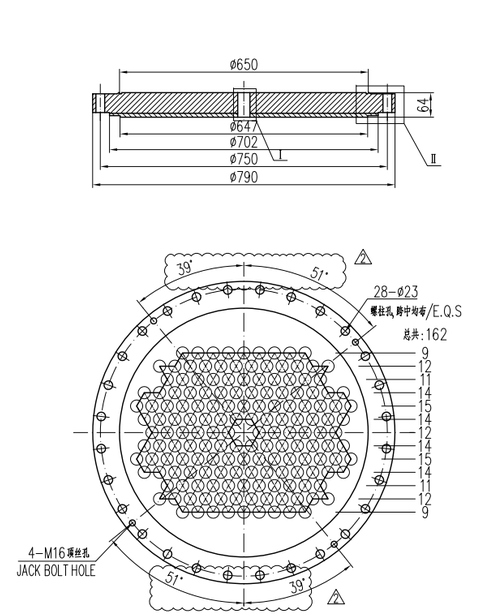

其余 OTHERS 25

技术要求Technical Requirements:

1.锻件16Mn Ⅲ应按照NB/T47008-2017中III级规定进行制造、检验和验收，正火状态供货，不允许拼接。
The forging 16Mn Ⅲ fabrication, inspection and acceptance for forging shall be as perNB/T47008-2017.

2.管孔应严格垂直于管板面，其垂直度允差为0.10 mm，管孔表面不允许存在贯通的纵向或螺旋条痕。
The tube holes shall be perpendicular to sealing face of tubesheet. the perpendicularity permiting deviation is 0.10 mm, and the tube holes surface shall be free of defects such as longitudinal or spiral through.

3.管板密封面应与管板轴线垂直，其垂直度允差为0.25 mm。
The sealing surface of the tubesheet shall be vertical with axis, and the vertical tolerance is 0.25 mm.

4.螺栓孔中心圆直径和相邻两螺栓孔弦长允差为±0.6 mm，任意两螺栓孔弦长允差为±1.5 mm。
The tolerance of b.c.d and chord length of two adjacent bolt holes shall be ±0.6 mm,the tolerance of two optional bolt holes shall be ±1.5 mm.

5.管板钻孔后先抽查不小于60°的管板中心角区域的管孔，允许有4%的管孔上偏差超GB/T 151-2014表6-10~6-17中的相应值，但不超出偏差的50%，不满足此要求时应100%检查。
After finnal drilling, the tube holes within the tubesheet certral angle area of no less than 60° shall be checked firstly, the deviation of 4% of the tube holes is allowed to exceed the corresponding values in Table 6-10~6-17 of GB/T 151-2014, but not more than 50% of the corresponding deviation, if it cannot meet with these requirements, it shall be done 100% inspection.

6.管板钻孔从管程侧起钻，钻孔后管板坯料（出钳）一侧表面≥96%的韧带宽度值不小于6.673mm，允许<4%的韧带宽度为4.56mm。
Drill the tubesheet from the tube side. At the tubesheet surface of drilling end side(side of drilling out),the allowable ligament width B for >96% ligament width between two adjacent tube holes shall shall be not less than 6.673mm,and the allowble min. width Bmin for <%4 ligament is 4.56mm.

7.管孔表面应清理干净，不应有影响胀接或焊接连接质量的毛刺、铁屑、锈蚀、油污等，胀接管孔表面不应有影响胀接质量的纵向或螺旋状划痕等缺陷。
There should be no burr, iron filings, rusty spot, oil, etc., effecting the quality of expanding or welding connection. The tube hole surface for expanded connections, there should be no longitudinal or spirally scorings defects, effecting the expanded quality.

8.除注明外，加工面线性尺寸的未注公差按GB/T 1804-2000 级m级。
Unless otherwise specified, the unindicated tolerance of linear dimension of machined surface shall be in accordance with grade m of GB/T 1804-2000.

9.基层材料的待特用表面和加工后的特用层表面应分别进行100%MT或PT检测并符合 NB/T 47013.4 或NB/T 47013.5-2015标准中的I级要求
The surface of the base material to be surfacing and the surface of the machined surfacing layer shall be tested for 100%MT or PT, respectively, and comply with the Level I requirements of the NB/T 47013.4 or NB/T 47013.5-2015 standard.

10.堆焊完成加工后的管板耐蚀层有效厚度(包括密封面积)不小于6mm
After surfacing and machining, the effective thickness of the corrosion-resistant layer on the tube sheet (including the sealing surface area) shall not be less than 6mm

5	下管板 BOTTOM TUBESHEET	16Mn Ⅲ锻件S31603	181	/	WXCE8260-02	WXCE8260-00-1
件号 PART NO.	名称 DESCRIPTION	材料 MATERIAL	重量kg WEIGHT	比例 SCALE	所在图号 LOCATED DWG. NO.	装配图号 ASSEMBLY DWG. NO.

其余 OTHERS 25

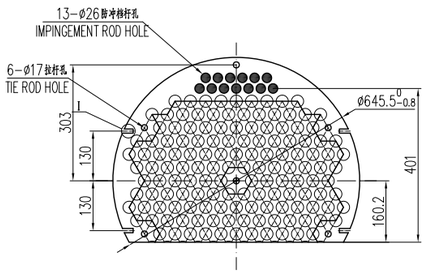

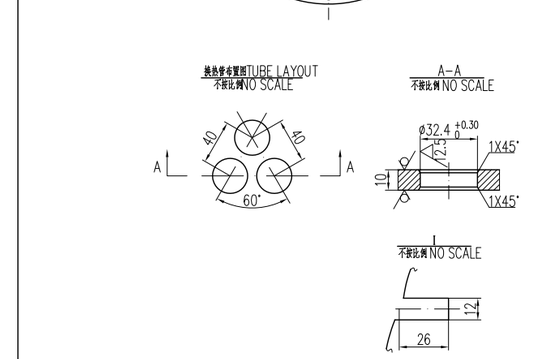

技术要求Technical requirements:

1.折流板应平整，平面度允差为1mm。
Baffle plate should be flat,the plainness tolerance is 1mm.

2.折流板周边及钻孔管孔两端必须倒角1×45°，并清除周围毛刺。
Both inside edges of each tube hole after drilling and the outside edge of Support plate shall be chamfered 1 x45°, and all to be free of any burrs.

30	折流板 #C BAFFLE	Q235B	13	/	WXCE8260-02	WXCE8260-00-1
件号 PART NO.	名称 DESCRIPTION	材料 MATERIAL	重量kg WEIGHT	比例 SCALE	所在图号 LOCATED DWG. NO.	装配图号 ASSEMBLY DWG. NO.

其余 OTHERS 25

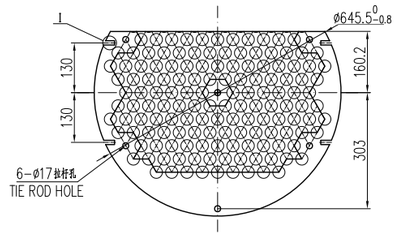

技术要求Technical requirements:

1.折流板应平整，平面度允差为1mm。
Baffle plate should be flat,the plainness tolerance is 1mm.

2.折流板周边及钻孔管孔两端必须倒角1×45°，并清除周围毛刺。
Both inside edges of each tube hole after drilling and the outside edge of Support plate shall be chamfered 1 x45°, and all to be free of any burrs.

14	折流板 #B BAFFLE	Q235B	13	/	WXCE8260-02	WXCE8260-00-1
件号 PART NO.	名称 DESCRIPTION	材料 MATERIAL	重量kg WEIGHT	比例 SCALE	所在图号 LOCATED DWG. NO.	装配图号 ASSEMBLY DWG. NO.

其余 OTHERS 25

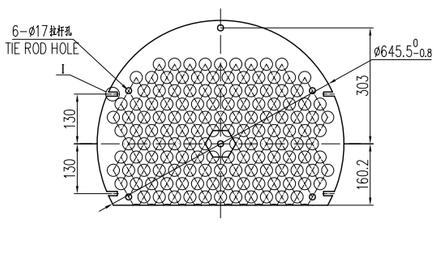

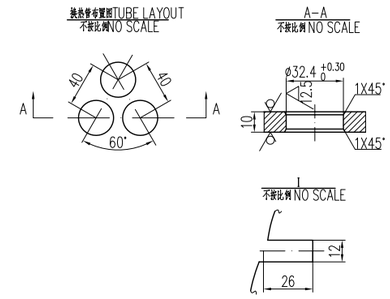

技术要求Technical requirements:

1.折流板应平整，平面度允差为1mm。
Baffle plate should be flat,the plainness tolerance is 1mm.

2.折流板周边及钻孔管孔两端必须倒角1×45°，并清除周围毛刺。
Both inside edges of each tube hole after drilling and the outside edge of Support plate shall be chamfered 1 x45°, and all to be free of any burrs.

12	折流板 #A BAFFLE	Q235B	13	/	WXCE8260-02	WXCE8260-00-1
件号 PART NO.	名称 DESCRIPTION	材料 MATERIAL	重量kg WEIGHT	比例 SCALE	所在图号 LOCATED DWG. NO.	装配图号 ASSEMBLY DWG. NO.

其余 OTHERS 25

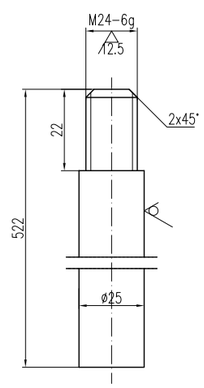

19	挡冲挡杆 ø25 L=522 IMPINGEMENT ROD	Q235B	2.1	/	WXCE8260-02	WXCE8260-00-1
件号 PART NO.	名称 DESCRIPTION	材料 MATERIAL	重量kg WEIGHT	比例 SCALE	所在图号 LOCATED DWG. NO.	装配图号 ASSEMBLY DWG. NO.

版次/REV.	版次说明/DESCRIPTION	设计/PREPARED	校核/REVIEWED	审核/APPROVED	日期/DATE
5					
4					
3					
2	供审查/FOR APPROVAL	秦天治	陈荣	孙守巍	2025/5/5
1	供审查/FOR APPROVAL	秦天治	陈荣	孙守巍	2025/4/15
0	供审查/FOR APPROVAL	秦天治	陈荣	孙守巍	2025/3/26

本图纸版权为无锡化工装备股份有限公司财产，未经本公司许可不得转让或发制给第三方。
The copyright of this drawing is the property of China Wuxi Chemical Equipment Co.,Ltd.(WCE), unauthorized disclosure or duplication to the third party is not permitted.

无锡化工装备股份有限公司
WUXI CHEMICAL EQUIPMENT CO., LTD.

设计项目 DESIGN PROJECT: 年产60万吨石脑油/MTBE/甲醇生产装置项目 PT PETRO CHO NUSANTARA 300000 TPA NPG PROJECT

设计阶段 DESIGN PHASE: 施工图 FOR CONSTRUCTION

设计 PREPARED		醛回收塔再沸器 Aldehyde recovery tower reboiler 零件图 II DETAIL DRAWING II	工作令号 WORK NO: WHA25-033-1
校核 REVIEWED			设备位号 ITEM NO.: E-2201
审核 APPROVED			图号 DRAWING NO.: WXCE8260-02
批准 AUTHORIZED		比例 SCALE 1:8	版次 REV. /

其余 OTHERS 25

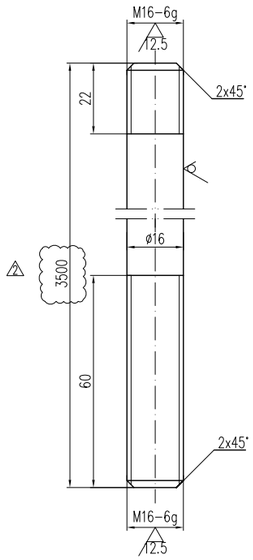

件号 PART NO.	名称 DESCRIPTION	材料 MATERIAL	重量kg WEIGHT	比例 SCALE	所在图号 LOCATED DWG. NO.	装配图号 ASSEMBLY DWG. NO.
9	拉杆ø16 L≒3500 TIE ROD	Q235B	5.5	/	WXCE8260-03	WXCE8260-00-1

其余 OTHERS 25

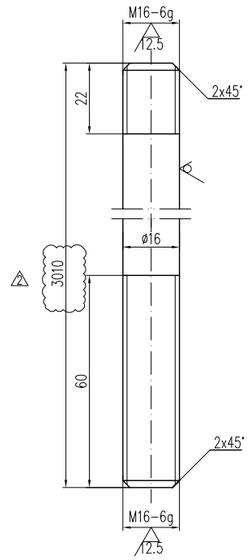

件号 PART NO.	名称 DESCRIPTION	材料 MATERIAL	重量kg WEIGHT	比例 SCALE	所在图号 LOCATED DWG. NO.	装配图号 ASSEMBLY DWG. NO.
28	拉杆ø16 L≒3010 TIE ROD	Q235B	4.7	/	WXCE8260-03	WXCE8260-00-1

制造厂铭牌

DETAIL OF MANUFACTURER'S NAMEPLATE

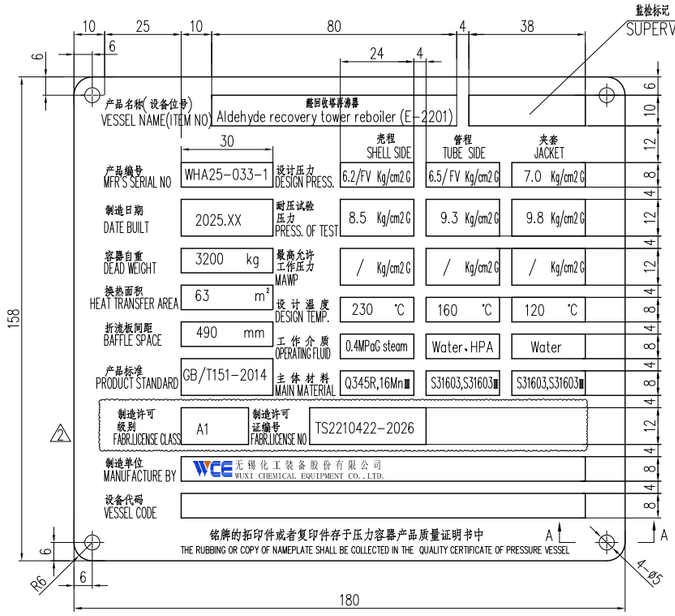

技术要求

TECHNICAL REQUIREMENTS:

1.所有单位为毫米。
All dimensions are in mm.

2.铭牌底面为黑色；方框内为材料本色；黑底上面的字为材料本色；方框内的字为黑色；所有文字数码符号应凸出底面 0.2 mm。中文字体为宋体，除产品名称，制造单位名称字高为5mm，其它字高为3.5mm；英文字体为新罗马字，除产品名称，制造单位名称字高为3.5mm，其它字高为2.5mm。
The background colour of Name Plate shall be black and in the rectangular shall be metal color; the word color on the black background shall be metal colour and on the metal background shall be black. All of the words including letters, numbers, symbols and etc, shall be embossed for 0.2mm. the word type of chinese is song type and the height of word is 3.5mm except "product name and fabricator name" height is 5 mm. English, Number and Symbol is type New Roman. height of word is 2.5mm except "product name, fabricator name" height 3.5 mm.

3.铭牌表面不允许有明显的凹凸变形，表面翘曲度在100mm范围内不得超过1 mm。
Any distinct deformation of warpage on the Name Plate is not permitted and shall be less than 1 mm per 100mm.

4.铭牌表面应平整光洁，色彩均匀，不得有裂纹锈迹及色和明显的擦伤丝纹。
The surface of the Name Plate shall be flat, smooth and uniform color and free of any crack, rust and scratch.

5.铭牌上的文字，符号，线条应清晰完整，不得断缺和模糊，不允许有影响其清晰度的斑点和暗纹。
Letters symbols and lines in the Name Plate shall be clear and complete and shall not be any stain and shadow.

6.漆膜在铭牌上的附着必须牢固，漆膜上不得有裂纹，脱落和明显的颗粒杂质。
The film of painting on the Name Plate shall be firm and free of any wrinkles, shedding and impurity.

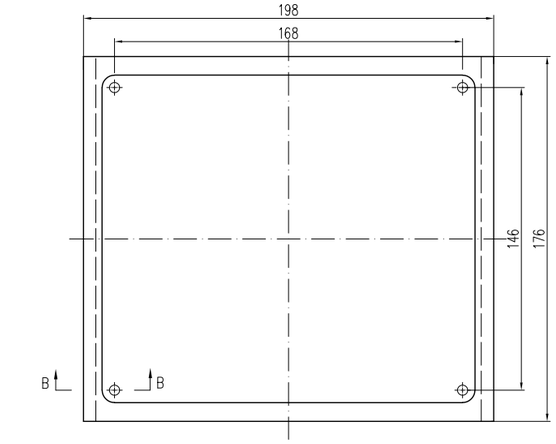

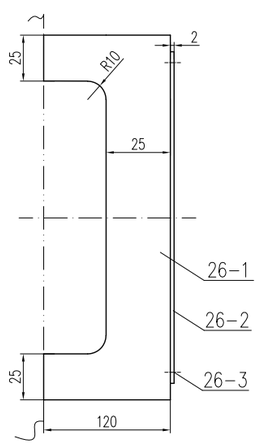

A-A
不按比例

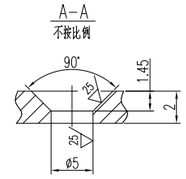

B-B
不按比例

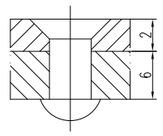

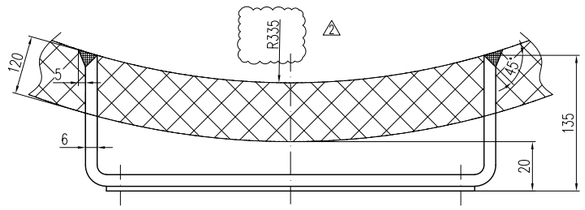

件号 PART NO.	图号或标准号 DWG. OR STD.	名称 DESIGNATION	数量 QTY.	材料 MATERIAL	单重(kg) EACH WEIGHT	总重(kg) TOTAL WEIGHT	备注 REMARKS
26-3	GB/T 827-1986	铆钉 ø4x12	4	304	/	/	
26-2		铭牌 t=2	1	S30408		0.5	
26-1		支架 t=6	1	Q345R		3.5	
26	铭牌及支架 N.P. & BRACKET	组合件 ASSEMBLY	4.0	/	WXCE8260-03	WXCE8260-00-1	

件号 PART NO.	名称 DESCRIPTION	材料 MATERIAL	重量kg WEIGHT	比例 SCALE	所在图号 LOCATED DWG. NO.	装配图号 ASSEMBLY DWG. NO.

版次/REV.	版次说明/DESCRIPTION	设计/PREPARED	校核/REVIEWED	审核/APPROVED	日期/DATE
5					
4					
3					
2	供审查/FOR APPROVAL	秦天浩	陈睿	孙守巍	2025/5/5
1	供审查/FOR APPROVAL	秦天浩	陈睿	孙守巍	2025/4/15
0	供审查/FOR APPROVAL	秦天浩	陈睿	孙守巍	2025/3/26

本图纸版权为无锡化工装备股份有限公司所产，未经本公司许可不得转让或复制给第三方。
The copyright of this drawing is the property of China Wuxi Chemical Equipment Co.,Ltd.(WCE), unauthorized disclosure or duplication to the third party is not permitted.

无锡化工装备股份有限公司 WUXI CHEMICAL EQUIPMENT CO.,LTD.

设计 PREPARED		醛回收塔再沸器 Aldehyde recovery tower reboiler 零件图Ⅲ DETAIL DRAWING Ⅲ	设计项目 DESIGN PROJECT: 印尼路易斯安纳化工环境产业园乙烯/甲醇高二期项目 PT PETRO OKI NUSANTARA 30000 TPA MPG PROJECT
校核 REVIEWED			设计阶段 DESIGN PHASE: 施工图 FOR CONSTRUCTION
审核 APPROVED			工作令号 WORK NO: WHA25-033-1
批准 AUTHORIZED		比例 SCALE 1:8 / 版次 REV. /	设备位号 ITEM NO.: E-2201
			图号 DRAWING NO.: WXCE8260-03
			第5页 共6页 PAGE 5 OF 6

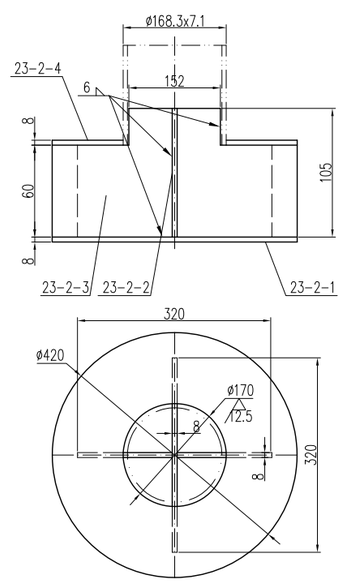

件号 PART NO.	图号或标准号 DWG.NO.OR STD.NO.	名称 DESCRIPTION	数量 QTY.	材料 MATERIAL	单重(kg) EACH WEIGHT	总重(kg) TOTAL WEIGHT	备注 REMARKS
23-2-4		环板ø420/ø170 t=8 ANNULAR PLATE	1	S31603		4.7	
23-2-3		肋板Ⅱ t=8 RIB	2	S31603	1.1	2.2	
23-2-2		肋板Ⅰ t=8 RIB	1	S31603		2.3	
23-2-1		挡板ø420 t=8 IMPINGEMENT PLATE	1	S31603		6.1	
23-2	分布器 DISTRIBUTOR	组合件 ASSEMBLY	15.3	/	WXCE8260-03	WXCE8260-01	

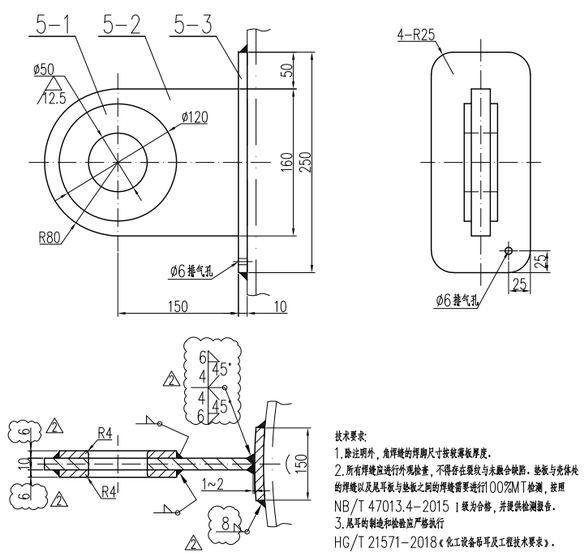

技术要求:
1.除注明外，角焊缝的焊脚尺寸按较薄板厚度。
2.所有焊缝应进行外观检查，不得存在裂纹与未融合缺陷。垫板与壳体间的焊缝以及尾耳板与垫板之间的焊缝需要进行 0072MT 检测，按照 NB/T 47013.4-2015 Ⅰ级为合格，并提供检测报告。
3.尾耳的制造和检验应严格执行 HG/T 21571-2018《化工设备吊耳及工程技术要求》。

件号 PART NO.	图号或标准号 DWG.NO.OR STD.NO.	名称 DESCRIPTION	数量 QTY.	材料 MATERIAL	单重(kg) EACH WEIGHT	总重(kg) TOTAL WEIGHT	备注 REMARKS
29-3		垫板 t=10	1	Q345R		2.9	
29-2		尾耳板 t=10	1	Q345R		2.7	
29-1		衬板 t=5	2	Q345R	1.0	2.0	
29	尾部吊耳 TAILING LUG	组合件 ASSEMBLY	7.6	/	WXCE8260-03	WXCE8260-00-1	

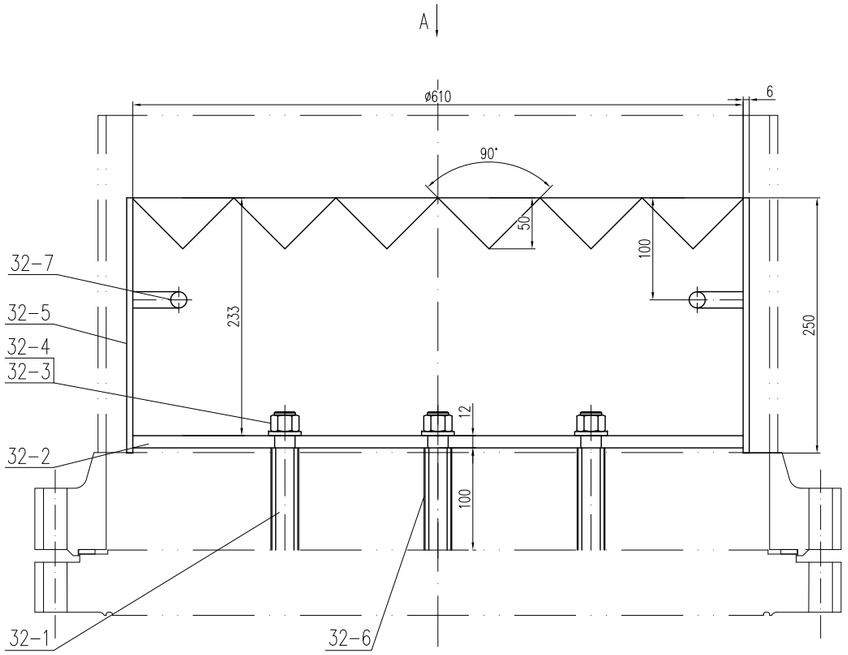

A向
不按比例/NO SCALE

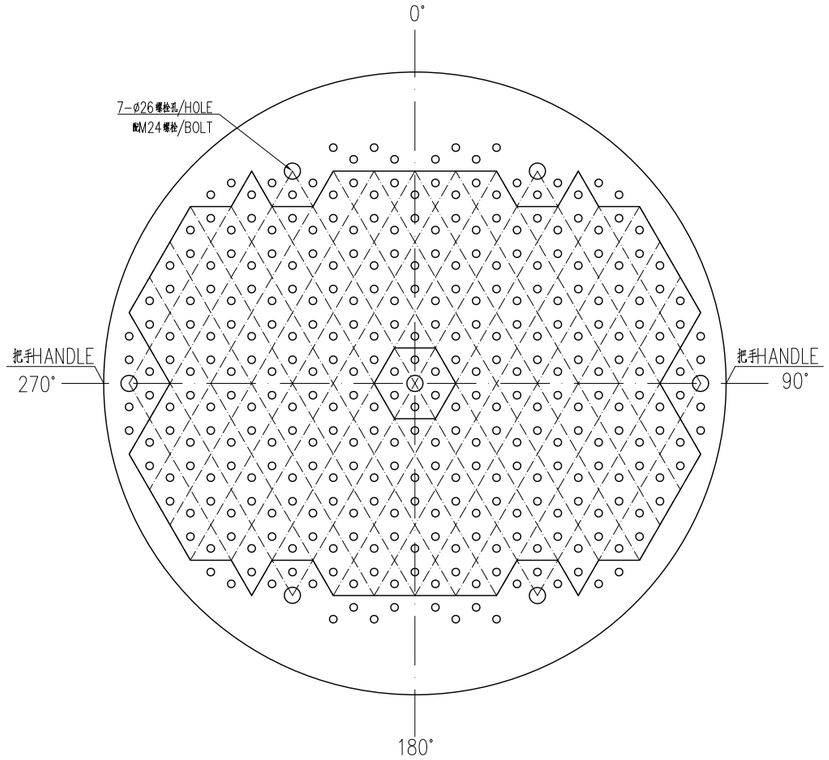

螺柱与管板焊接详图
WELDING DETAIL OF BOLT TO TUBESHEET
不按比例/NO SCALE

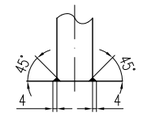

件号32-1螺栓详图
DETAIL OF BOLT
不按比例/NO SCALE

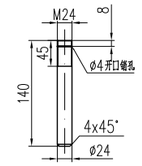

布液盘孔布置图
PLAN OF LIQUID DISTRIBUTION HOLE
不按比例/NO SCALE

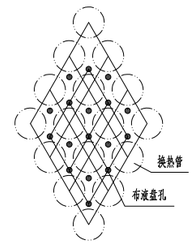

布液盘孔间距
PLAN OF LIQUID DISTRIBUTION HOLE
不按比例/NO SCALE

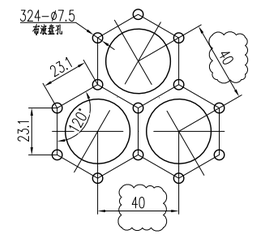

把手详图
DETAIL OF HANDLE
不按比例/NO SCALE

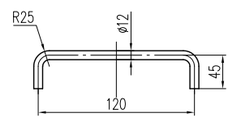

布液盘孔详图
DETAIL OF LIQUID DISTRIBUTION HOLE
不按比例/NO SCALE

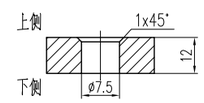

技术要求/Technical Requirements

1.底盘要有平面度要求，控制不得超过1mm;
The base plate shall have a flatness requirement, controlled to not exceed 1 mm.

2.底盘要有挠度要求控制正负1mm; 如达不到，在不影响其他原件的情况下可以增加筋板，以提高刚度。
The base plate shall have a deflection requirement, controlled within ±1 mm. If the requirement is not met, stiffening ribs may be added (without affecting other components) to improve rigidity.

3.底盘小孔要有垂直度要求，控制不得超过0.25mm。
The perpendicularity of small holes on the base plate shall be controlled to not exceed 0.25 mm.

4.布液盘圆心与管板圆心在同一轴线上
The center of the liquid distribution plate shall be coaxial with the center of the tube sheet.

5.件号1 螺栓采用满焊固定在上管板上，满焊应牢固，螺栓满焊之前，应先在上管板密封面侧划线找准螺栓定位点。
The bolt (Part No. 1) shall be fully welded and fixed to the upper tube sheet. The welding shall be secure. Before full welding, the bolt positioning points shall be marked on the sealing surface side of the upper tube sheet to ensure accurate alignment.

6.液体分布器的孔板与上管板之间的距离组装时一定要控制好，确保安装后孔板的水平度不大于1mm。
The distance between the orifice plate of the liquid distributor and the upper tube sheet shall be strictly controlled during assembly to ensure that the levelness of the orifice plate after installation does not exceed 1 mm.

7.液体分布器在设备水压前要在工厂进行试组装，满足要求后设备才能进行水压试验。
The liquid distributor shall undergo trial assembly in the factory before the equipment's hydrostatic test. The hydrostatic test may only proceed after the trial assembly meets the requirements.

8.液体分布器的安装方位请按照装配总图进行。
The installation orientation of the liquid distributor shall comply with the assembly general drawing.

件号 PART NO.	图号或标准号 DWG. OR STD.	名称 DESIGNATION	数量 QTY.	材料 MATERIAL	单重 EACH 总重(kg) TOTAL WEIGHT		备注 REMARKS
32-7		把手 HANDLE	2	S31603	0.4	0.8	
32-6		支撑管 ø32x2.5 L=100 SPACER	7	S31603	0.6	4.2	
32-5		筒节 DN610x6 L=250 SHELL	1	S31603		22.3	
32-4	GB/T 95-2002	垫圈 24 WASHER	7	S31603	/	/	
32-3	GB/T 41-2016	螺母M24 NUT	7	A2-70	0.1	0.7	
32-2		孔板 t=12 PLATE	1	S31603		25.9	
32-1		螺栓 BOLT	7	S31603	1.0	7.0	

件号 PART NO.	分布盘 DISTRIBUTION PLATE	组合件 ASSEMBLY	60.9	/	WXCE8260-04	WXCE8260-00-1
件号 PART NO.	名称 DESCRIPTION	材料 MATERIAL	重量kg WEIGHT	比例 SCALE	所在图号 LOCATED DWG. NO.	装配图号 ASSEMBLY DWG. NO.

版次/REV.	版次说明/DESCRIPTION	设计/PREPARED	校核/REVIEWED	审核/APPROVED	日期/DATE
5					
4					
3					
2					
1	供审查/FOR APPROVAL	秦天治	陈睿	孙守巍	2025/5/5
0	供审查/FOR APPROVAL	秦天治	陈睿	孙守巍	2025/4/15

本图纸版权为无锡化工装备股份有限公司财产，未经本公司许可不得转让或发到给第三方。
The copyright of this drawing is the property of China Wuxi Chemical Equipment Co.,Ltd(WCE), unauthorized disclosure or duplication to the third party is not permitted.

WCE 无锡化工装备股份有限公司
WUXI CHEMICAL EQUIPMENT CO., LTD.

设计项目 DESIGN PROJECT	印尼雅加达分公司3.3万吨/年烷烃二期项目 PT PETRO OKI NUSANTARA 30000 TPA NPG PROJECT		
设计阶段 DESIGN PHASE	施工图 FOR CONSTRUCTION		
工作令号 WORK NO	WHA25-033-1		
设备位号 ITEM NO.	E-2201		
图号 DRAWING NO.	WXCE8260-04		
设计 PREPARED		醛回收塔再沸器 Aldehyde recovery tower reboiler 零件图Ⅳ DETAIL DRAWING Ⅳ	
校核 REVIEWED			
审核 APPROVED			
批准 AUTHORIZED		比例 SCALE 1:3	版次 REV. /
		第6页 共6页 PAGE 6 OF 6	