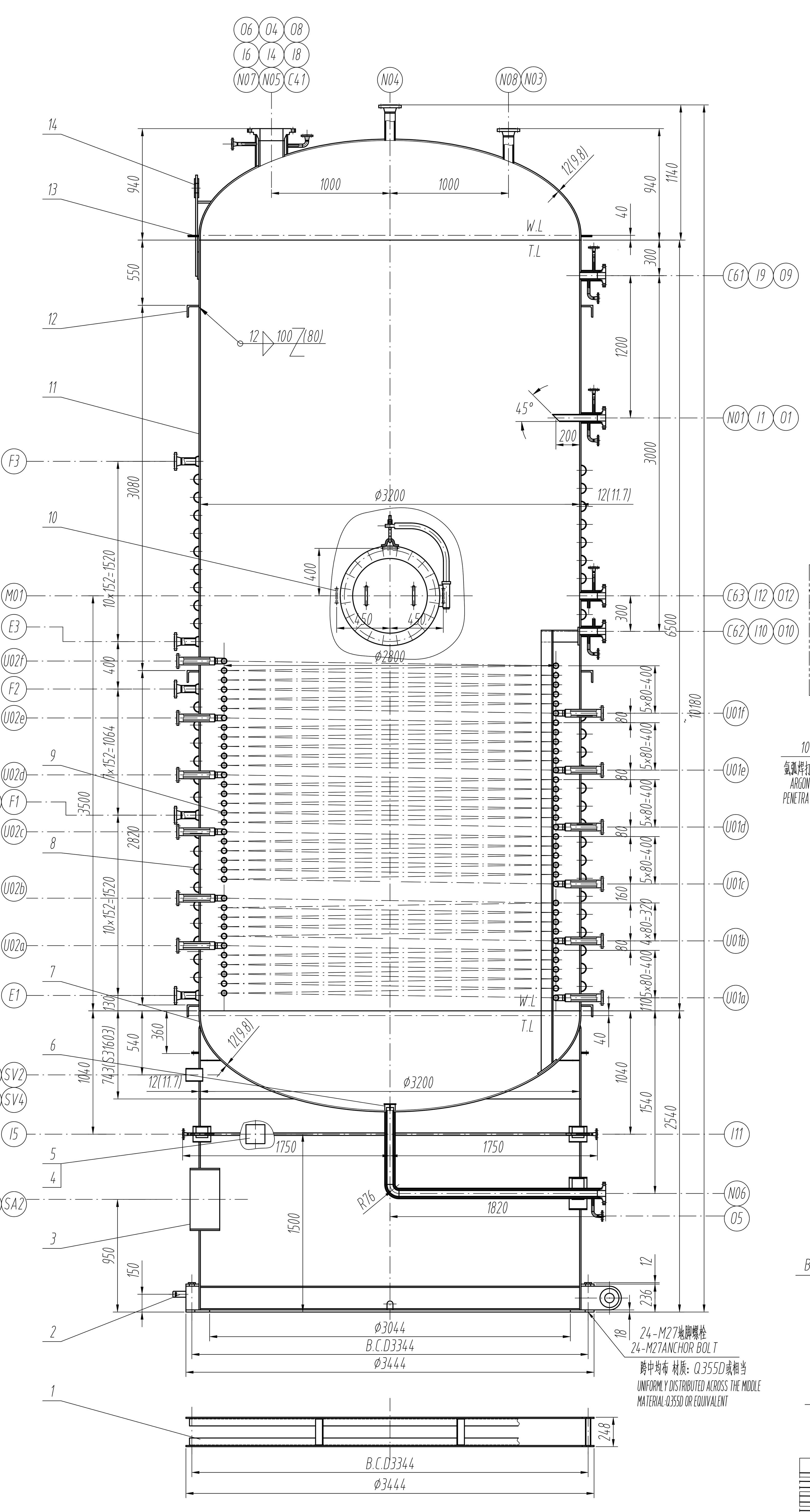

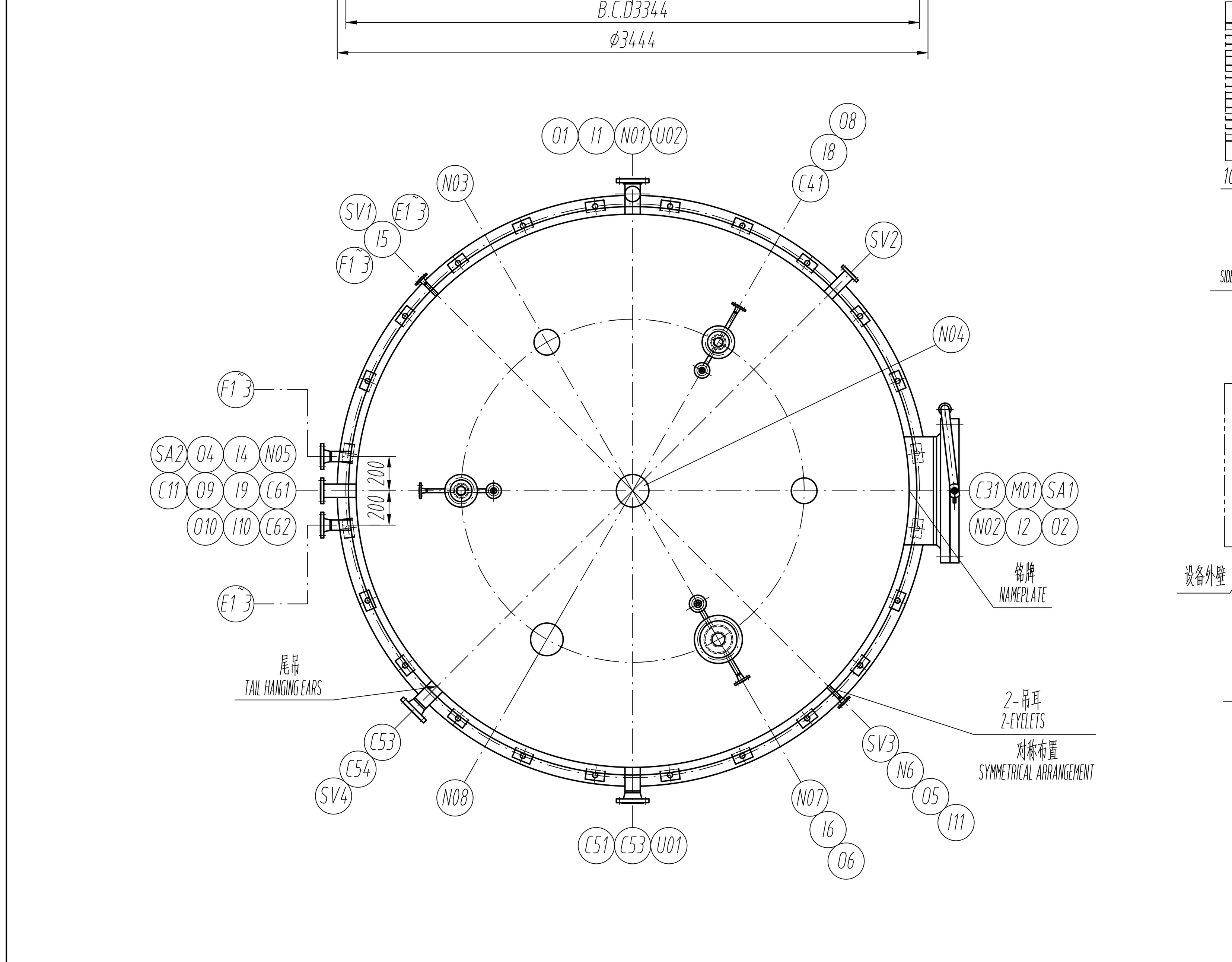

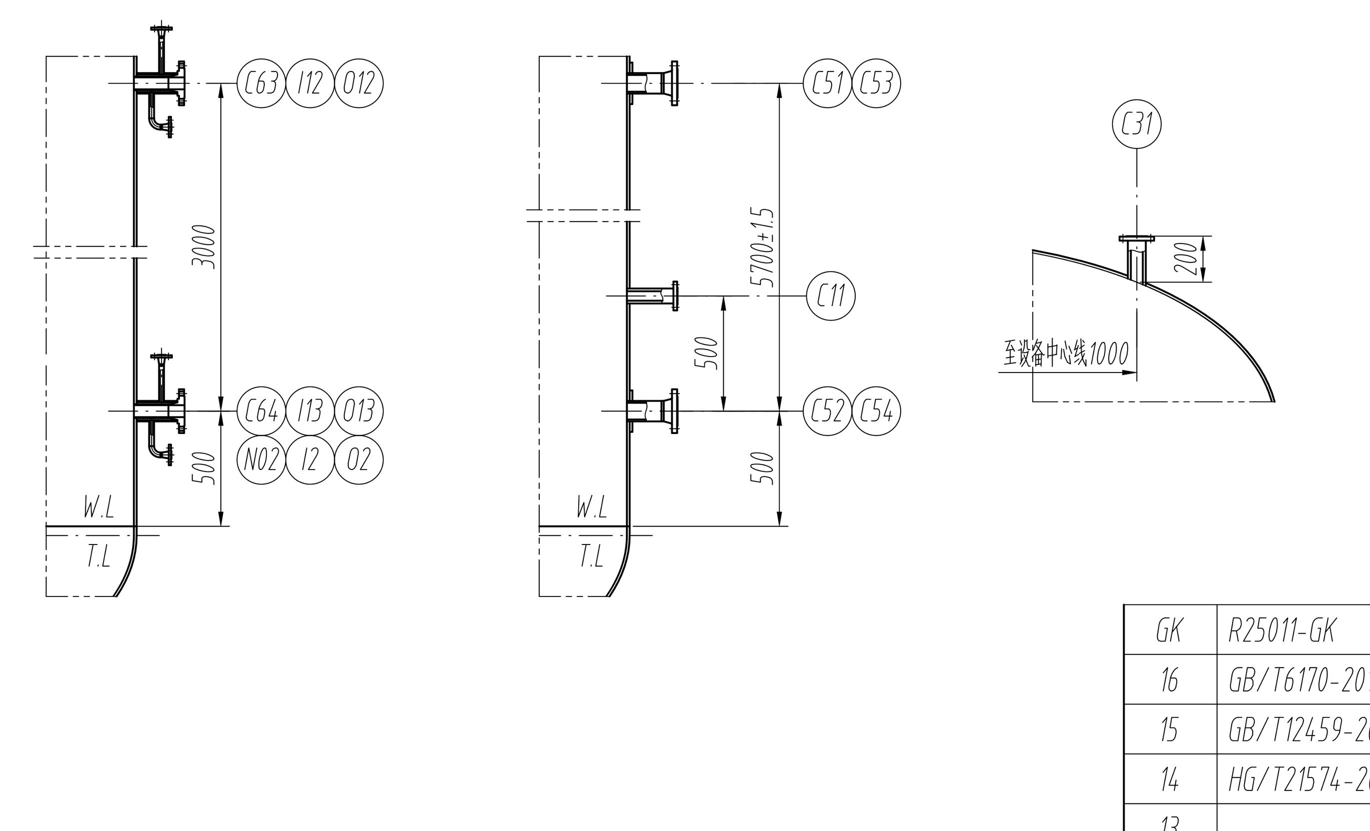

除注明外AB类焊接接头
"A" & "B" JOINT OF SHELL
不按比例
NO PROPORTIONAL

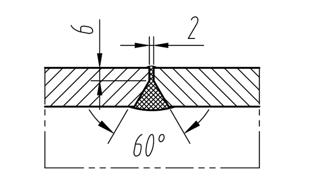

接管与壳体焊接接头
NOZZLE JOINT TO SHELL
不按比例
NO PROPORTIONAL

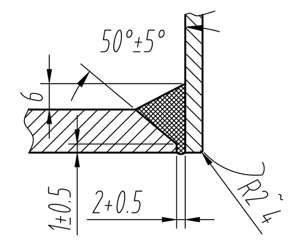

带补强圈接管与壳体焊接接头
NOZZLE JOINT TO SHELL
不按比例
NO PROPORTIONAL

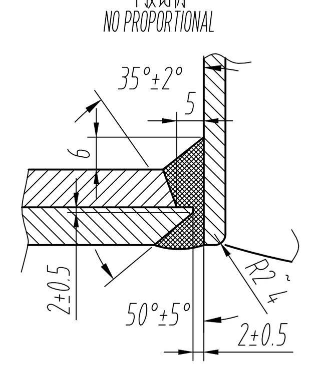

带夹套接管与壳体焊接接头
NOZZLE JOINT TO SHELL
不按比例
NO PROPORTIONAL

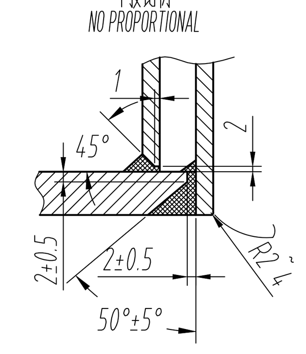

裙座与封头连接结构
SKIRT AND HEAD CONNECTION STRUCTURE
不按比例
NO PROPORTIONAL

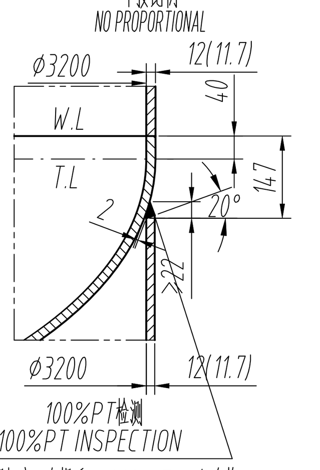

100%PT检测
100%PT INSPECTION
氩弧焊打底，全焊透，100%UT，Ⅱ级合格
ARGON ARC WELDING FOR THE BASE,FULL PENETRATION,100%UT,QUAUFIED AT LEVEL Ⅱ

地脚螺栓座详图
DETAILED DRAWING OF THE ANCHOR BOLT BASE
不按比例
NO PROPORTIONAL

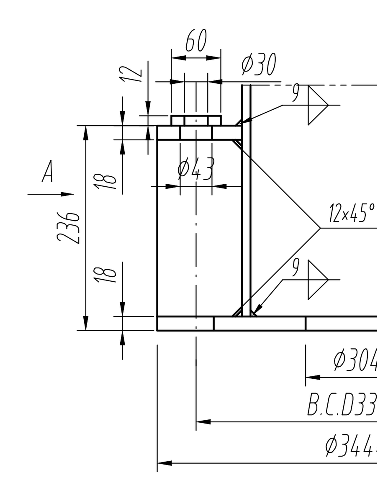

底封头焊缝处的裙座缺口
SKIRT NOTCH AT THE WELD OF THE LOWER HEAD
不按比例
NO PROPORTIONAL

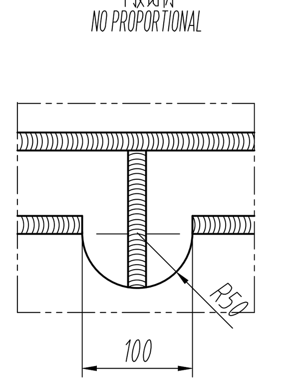

A向
VIEW A
不按比例
NO PROPORTIONAL

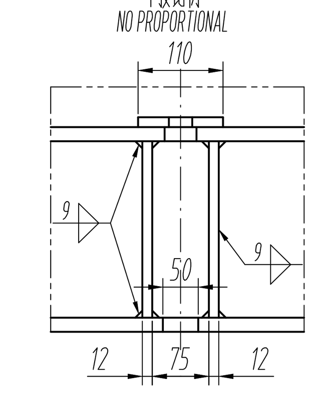

通道管详图
CHANNEL HOLE
不按比例
NO PROPORTIONAL

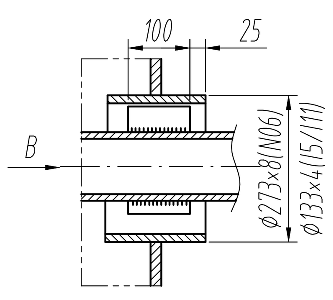

B向
VIEW B
不按比例
NO PROPORTIONAL

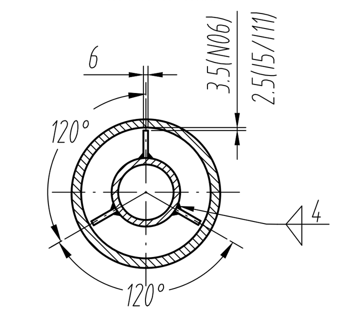

外半管与接管示意图
SCHEMATIC DIAGRAM OF COIL PIPE MEETING LARGE NOZZLE
不按比例
NO PROPORTIONAL

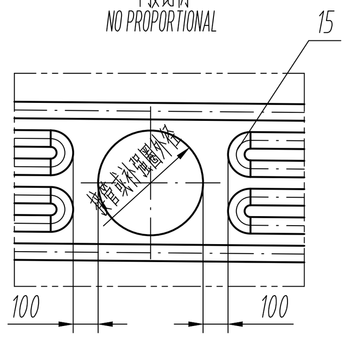

外半管与壳体焊接详图
DETAILED WELDING DIAGRAM OF OUTER HALF PIPE AND SHELL
不按比例
NO PROPORTIONAL

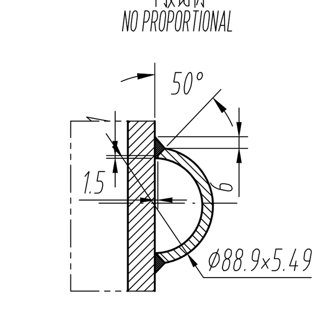

侧壁夹套管引出管结构图
SIDE WALL JACKET TUBE LEAD-OUT STRUCTURE DIAGRAM
不按比例
NO PROPORTIONAL

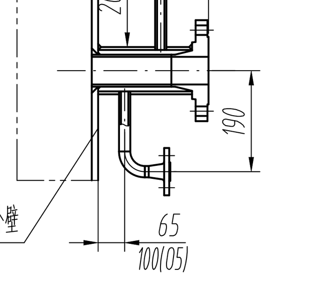

封头夹套管引出管结构图
HEAD COVER JACKET PIPE LEAD-OUT STRUCTURE DIAGRAM
不按比例
NO PROPORTIONAL

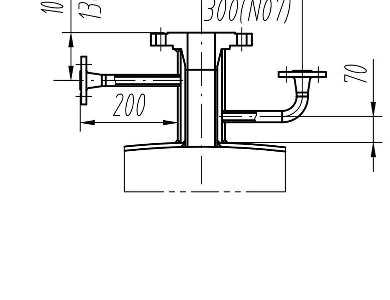

把手详图
DETAILED DRAWING OF THE HANDLE
不按比例
NO PROPORTIONAL

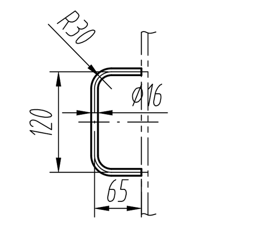

接地板详图
EARTH PLATE
不按比例
NO PROPORTIONAL

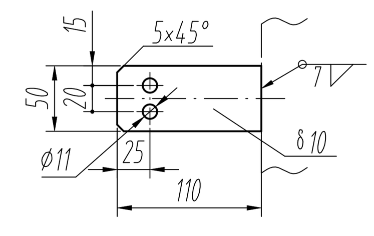

裙座防火层螺母布置示意图
SCHEMATIC DIAGRAM OF THE FIRE-PROOF LAYER NUT LAYOUT OF SKIRT
不按比例
NO PROPORTIONAL

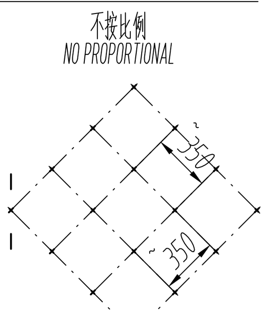

D-D
不按比例
NO PROPORTIONAL

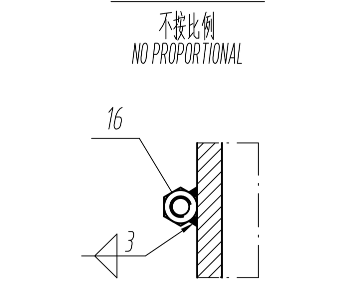

设计、制造与检验主要数据表 THE MAIN DATA SHEET OF DESIGN,MANUFACTURE AND INSPECTION

规范、标准 CODE & STANDARD	TSG 21-2016《固定式压力容器安全技术监察规程》(含第1号修改单)、GB/T150.1 150.4-2024《压力容器》、TSG 21-2016《SUPERVISION REGULATION ON SAFETY TECHNOLOGY FOR STATIONARY PRESSURE VESSEL》、GB/T150.1 150.4-2024《PRESSURE VESSELS》、HG/T20584-2020《钢制化工容器制造技术规范》。HG/T20584-2020《TECHNICAL STANDARD OF FABRICATION FOR STEEL CHEMICAL VESSELS》。					
	壳体 SHELL	盘管 COIL	半管 COIL	压力容器类别 PRESS VESSEL CLASS	Ⅱ	
工作压力 WORKING PRESS. kg/cm2G	3	4.6	4.6	焊接规程 WELDING SPEC.	NB/T47015-2011	
设计压力 DESIGN PRESS. kg/cm2G	5.1/-1	7	7	焊接材料 WELDING MATERAL	S31603	A022、ER316L
最高允许工作压力 MAX ADMISSIBLE OPERATING PRESS. kg/cm2G					S30403	A002、ER308L
工作温度 WORKING TEMP. ℃	135	70	70		S31603与碳钢	A312
设计温度 DESIGN TEMP. ℃	150	150	120		其余OTHERS	J427
介质(组分) FLUD (COMPONENT)	H2、NPG	HW70	HW70	焊接接头形式 WELDING STRUCTURE	除注明外按HG/T20583-2020规定的全焊透结构 FULLY-PENETRATE IN HG/T20583-2020	
介质(密度) FLUD (DENSITY) kg/m³	0.45(V)/903(L)			角焊缝腰高 THICK. OF FILLET WELD	除注明外取相焊件较薄板厚度 THE THICKNESS OF THINNER PLATE JIONED	
介质特性 FLUD PERFORMANCE	易爆，中度危害 EXPLOSIVE,MODERATE TOXIC		--	法兰与接管的焊接 WELDING BETW. PIPE AND FLANGE	除注明外按相应法兰标准 ACC.FLANGE STANDARD	
安全阀整定压力 THE SET PRESS.OF SAFETY VALVES kg/cm2G	3.6			产品焊接试件 PRODUCT WELDED TEST COUPONS		
设计使用年限 DESIGN WORKING LIFE(YEARS)	10			热处理 P.W.H.T.		
主要受压元件材料 MAIN MATERIAL 牌号(状态) NAME	S31603(1D)	S31603	S30403	其它 OTHERS		
标准 STANDARD	GB/T713.7-2023	GB/T13296-2023	GB/T13296-2023	其它 OTHERS		
腐蚀裕量 CORR. ALLOW. mm	0(壳体)/2(裙座) 0(SHELL)/2(SKIRT)	0	0	油漆、包装、运输 PAINT, PACKAGING, TRANSPORTATION	NB/T10558-2021、22150-00000-MC08	
焊接接头系数 JOINT. EFF. 筒体/封头	1.0/1.0	1.0/--	1.0/--	管口、支座等方位 NOZZLE ORIENTATION	按管口方位图 BY PIPE PORT ORIENTATION MAP	
耐压试验方法(压力/介质) TYPE OF PROOF PRESS TEST kg/cm2G	液压(7.7(卧)/8.5(立)/水) HYDRAULIC(7.7(H)/8.0(H)/WATER)	液压(10.5/水) HYDRAULIC (10.5/WATER)	液压(10.5/水) HYDRAULIC (10.5/WATER)			
泄漏试验方法(压力/介质) TYPE OF LEAK TEST kg/cm2G						
容积 CAPACITY m³	61.5					
传热面积 HEAT TRANSFER AREA m²		43.3	21.4			
装量系数 FULL EFF.						
保温材料/厚度 INSULATION MATERIAL/THICKNESS mm	硅酸铝/80 ALUMINUM SILICATE/80					
防火材料/厚度 FIRE PREVENTION/THICKNESS mm	HOLD					

无损检测 N.D.E	焊接接头类别 JOINT CATEGORY		检测率 %	方法-合格级别 METHOD-CLASS	技术等级 TECH-CLASS	标准 STANDARD	备注 REMARK
	A.B	壳体 SHELL	100%	RT-Ⅱ	AB	NB/T47013.2-2015	
	A.B	盘管/半管 COIL	100%	RT-Ⅱ	AB	NB/T47013.2-2015	
	C.D E		100%	PT-Ⅰ		NB/T47013.5-2015	

安装环境	月平均最低温度 MEAN MONTHLY MIN. TEMP.	基本风压 REFERENCE WIND PRESS.	地震设防烈度 SEISMIC FORTIFICATION INTENSITY	场地土类别 SOIL TYPE OF THE SITE	室(内/外) DOOR (IN/OUT)	防爆等级 EXPLOSIVE-PROOFGRADE	接地要求 GROUNDING REQUIREMENT
	21 ℃	400 Pa	7(0.15g)	Ⅲ			接地 GROUNDING

补充技术要求:
Supplementary technical requirements:

1、设备用材S31603、S30403应符合GB/T713.7-2023的规定；S30408、S30403锻件应符合NB/T47010-2017中Ⅱ级的规定；盘管材料应符合GB/T13296-2023的规定，除盘管外其余不锈钢钢管应符合GB/T14976-2012的规定。
1.Equipment materials S30408 and S30403 should comply with the provisions of GB/T713.7-2023;S30408 and S30403 forgings should comply with the provisions of Class II in NB/T47010-2017 ;The materials of the coil pipes should comply with the provisions of GB/T13296-2023;Except for coil pipes,The remaining stainless steel pipes should comply with the provisions of GB/T14976-2012.

2、S31603材料及焊接接头（包括焊接工艺评定、产品焊接试件）按GB/T4334-2020方法B进行晶间腐蚀试验，平均腐蚀速率应不大于1.6g/m2.h，腐蚀试件取样和组批应按GB/T21433-2008第8条规定进行。
2.S31603 materials and welding joints (including welding process evaluation and product welding tests) are subject to intergranular corrosion tests according to GB/T4334-2020 Method B,the average corrosion rate should not be greater than 1.6g/m2.h. The sampling and batching of corrosion specimens should be carried out in accordance with Article 8 of GB/T21433-2008.

3、采用无缝钢管的接管厚度负偏差不大于10%S(S为接管壁厚)。
3.The negative deviation of the thickness of the connecting pipe using seamless steel pipe shall not exceed 10% S(S is the thickness of the takeover).

4、除另有说明外，均为全焊透结构。焊接接头不得存在表面裂纹、未焊透、未熔合、表面气孔、弧坑、未填满和肉眼可见的夹渣等缺陷，不得存在咬边；焊缝与母材应当圆滑过渡；角焊缝外形应凹形圆滑过渡。
4.Unless otherwise stated, all are fully welded structures.Welded joints must not have defects such as surface cracks, unwelded, unfused, surface pores, arc pits, unfilled and visible slag inclusions, and must not have edge bites.The weld and the base material should be smoothly transitioned; the shape of the fillet weld should be concave and smoothly transitioned.

5、塔体组焊完毕后，应按照GB/T150.4-2024的6.5.11条检查壳体的圆度，最大允许偏差应不大于10mm。
5..After the tower body assembly is welded, the roundness of the shell should be checked according to Article 6.5.11 of GB/T150.4-2024,the maximum allowable deviation should not be greater than 10mm.

6、筒体任意3000mm长度的直线度偏差不得大于3mm，塔体总的直线度偏差不得大于6.5mm，塔体安装垂直度偏差不得大于10mm。
6.The linearity deviation of any 3000mm length of the cylinder shall not be greater than 3mm,The total linearity deviation of the tower body shall not be greater than 6.5mm,The verticality deviation of the tower body installation shall not be greater than 10mm.

7、裙座地脚螺栓孔中心圆直径允差以及相邻两孔和任意两孔弦长允差均不大于±3mm。
7.The tolerance for the diameter of the center circle of the skirt anchor bolt hole and the tolerance for the chord length of the adjacent two holes and any two holes shall not be greater than ±3mm.

8、就地液位计管口安装尺寸公差按HG/T20584-2020中14.2.13第6条的规定。
8.The installation dimension tolerance of the on-site liquid level gauge port is in accordance with Article 6 of Article 14.2.13 in HG/T20584-2020.

9、异种钢焊接接头、DN<250mm的接管与法兰的对接接头应按照NB/T47013.5-2015进行100%渗透检测，合格级别不低于Ⅰ级。
9.Welded joints of different steels and the butt joints of the connectors with DN <250mm and flange should be tested 100%PT according to NB/T47013.5-2015, and the pass level shall not be lower than Level I.

10、DN≥250mm的接管与壳体的焊接接头应按NB/T47013.3-2015进行100%超声检测，合格级别不低于Ⅰ级。
10.The welded joints of the connectors with DN≥250mm and the shell should be tested 100% UT according to NB/T47013.3-2015, and the pass level shall not be lower than Level I.

11、若接管采用板材卷制，纵缝应按照NB/T47013.2-2015进行100%RT检测，合格级别不低于Ⅱ级，技术等级不低于AB级。
11.If the pipe is rolled with a plate, the longitudinal seams should be tested 100% RT according to NB/T47013.2-2015, the pass level shall not be lower than Level II, and the technical level shall not be lower than Level AB.

12、不锈钢设备水压试验用水的氯离子含量应小于25mg/L，试验合格后应立即将水排净吹干。
12.The chloride ion content of water for water pressure test in stainless steel equipment should be less than 25mg/L.After passing the test, the water should be drained and blown dry immediately.

13、耐压试验合格后，介质接触的不锈钢表面应进行酸洗钝化处理，所形成的钝化膜按GB/T25150-2010规定的方法检测，合格后应将酸洗介质清洗干净，不得有残留。
13.After passing the pressure resistance test, the surface of the stainless steel contacted by the medium should be subjected to pickling and passivation. The passivation film formed should be tested according to the method specified in GB/T25150-2010. After passing the test, the pickling medium must be cleaned and there must be no residue.

14、本设备安全泄放装置（含泄放量）由甲方工艺计算确定（安全阀甲方自备），在管口N07处设置全启式安全阀一个，并与壳体连通，安全阀整定压力0.36MPa。安全阀应铅直安装，安全阀与容器间一般不宜安装截止阀门，如装设有阀门，在压力容器正常运行期间截止阀门必须保证全开（加铅封或者锁定），截止阀门的结构和通径不得妨碍超压泄放装置的安全泄放。
14.The safety discharge device of this equipment (including discharge amount) is calculated and determined by Party A's process (safety valves are prepared by Party A),A fully open safety valve is installed at the pipe port N07 and connected to the housing,Safety valve setting pressure 0.36MPa.The safety valve should be installed vertically,If equipped with valve,during normal operation of the pressure vessel, the shutdown valve must be fully opened(add lead seal or lock),The structure and diameter of the shut-off valve shall not hinder the safe discharge of the overpressure discharge device.

12、吊耳仅限空装状态下起吊。
12.The lifting ears are only allowed to be lifted in empty installation.

注: Note:

1、在设计寿命期内，压力容器使用单位，应根据装置的操作状态或TSG R21-2016第8章"定期检验"的要求，对该设备进行定期检验，并确认实际寿命和设计寿命的符合性。
1.During the design life period, the pressure vessel user unit should conduct regular inspections of the equipment according to the operating status of the device or the requirements of TSG R21-2016 Chapter 8 "Regular Inspection" and confirm the compliance of the actual life and design life.

2、加强圈兼做保温支撑，不得断开，遇到管口和平台支耳可上下移动，最大间距不得超过3500mm。
2.The strengthening ring is used as insulation support and must not be disconnected. When encountering the pipe mouth and platform support ears, they can move up and down. The maximum distance must not exceed 3500mm.

3、裙座地脚螺栓采用地脚螺栓基础模板就位，基础模板与裙座底板一起配钻螺栓孔，基础模板需提前送往安装现场。
3.The skirt anchor bolts are in place with anchor bolt foundation templates. The foundation template and the skirt base plate are equipped with drilled bolt holes. The foundation template needs to be sent to the installation site in advance.

4、设备设外半管尺寸DN80，中心间距152mm，顺时针向下，伴管热水下进上出，半管盘线应避开接管。
4.The equipment is equipped with an outer half pipe size DN80, with a center spacing of 152mm,clockwise down, and the pipe is in and out of the upper and lower water. The half pipe disc line should be avoided from taking over.

5、以下管口需带伴热，其规格如下:
5.The following pipe openings need to be heat tracing, and their specifications are as follows:
N01管口伴热入口为I1，伴热出口为01，伴热管口规格为DN15，接管规格为Φ21.3×3.65；
The heat tracing inlet of N01 pipe port is I1, the heat tracing outlet is 01, the heat tracing outlet is DN15, and the pipe port is Φ21.3×3.65;
N02管口伴热入口为I2，伴热出口为02，伴热管口规格为DN15，接管规格为Φ21.3×3.65；
The heat tracing inlet of N02 pipe port is I2, the heat tracing outlet is 02, the heat tracing outlet is DN15, and the pipe port is Φ21.3×3.65;
N05管口伴热入口为I4，伴热出口为04，伴热管口规格为DN15，接管规格为Φ21.3×3.65；
The heat tracing inlet of N05 pipe port is I4, the heat tracing outlet is 04, the heat tracing outlet is DN15, and the pipe port is Φ21.3×3.65;
N06管口伴热入口为I5和I11，伴热出口为05，伴热管口规格为DN15，接管规格为Φ21.3×3.65；
The heat tracing inlet of N06 pipe port is I5 and I11, the heat tracing outlet is 05, the heat tracing outlet is DN15, and the pipe port is Φ21.3×3.65;
N07管口伴热入口为I6，伴热出口为06，伴热管口规格为DN20，接管规格为Φ26.9×4.2；
The heat tracing inlet of N07 pipe port is I6, the heat tracing outlet is 06, the heat tracing outlet is DN20, and the pipe port is Φ26.9×4.2;
C41管口伴热入口为I8，伴热出口为08，伴热管口规格为DN15，接管规格为Φ21.3×3.65；
The heat tracing inlet of C41 pipe port is I8, the heat tracing outlet is 08, the heat tracing outlet is DN15, and the pipe port is Φ21.3×3.65;
C61~C64管口伴热入口为I9,I10,I12,I13，伴热出口为09,010,012,013，伴热管口规格为DN15，接管规格为Φ21.3×3.65；
The heat tracing inlet of C61~C64 pipe port is I9,I10,I12,I13, the heat tracing outlet is 09,0110,012,013, the heat tracing outlet is DN15, and the pipe port is Φ21.3×3.65;

6. N05,N07夹套法兰伴热介质为4.08kg/cm2G蒸汽，N01,N02,N06夹套法兰伴热介质为70℃热水，C41,C61~64夹套法兰伴热介质待定。
6.N05, N07 jacket flange heat-tracing medium is 4.08kg/cm2G steam,N01, N02, N06 jacket flange heat-trapping medium is 70℃ hot water,C41, C61~64 jacket flange heat-tracking medium to be determined.

管口表 LIST OF NOZZLE

符号 ITEM	公称尺寸 NPS	公称压力 CLASS	连接标准 COND.STD.	连接法兰形式 TYPE	连接面形式 FACING	用途或名称 SERVICE	管子规格 NOZZLE SIZE	密封面至设备中心线距离 PROJ.FROM C.L.TO F.F.	备注 REMARK
N01	2"×3"	150	SH/T3426-2014	JWN	RF	物料入口 INLET	Φ60.3×5.65/Φ88.9×5.7	1820	
N02	2"×3"	150	SH/T3426-2014	JWN	RF	物料出口 OUTLET	Φ60.3×5.65/Φ88.9×5.7	1820	
N03	2"	300	HG/T20615-2009	LWN	FM	氢气入口 H2 INLET	Φ84×16	见图 SEE DRAW	
N04	3"	150	ASME B16.5-2020	WN	RF	氢气出口 H2 OUTLET	Φ88.9×8.2	见图 SEE DRAW	
N05	2"×3"	150	SH/T3426-2014	JWN	RF	NPG返回口 NPG RETURN PORT	Φ60.3×5.65/Φ88.9×5.7	见图 SEE DRAW	
N06	2"×3"	150	SH/T3426-2014	JWN	RF	排液口 DRAIN	Φ60.3×5.65/Φ88.9×5.7	见图 SEE DRAW	
N07	8"×10"	150	SH/T3426-2014	JWN	RF	安全阀口 PSV CONNECTION	Φ219.1×12.55/Φ273×9	见图 SEE DRAW	
N08	3"	150	ASME B16.5-2020	WN	RF	备用口（带法兰盖） SPARE CONNECTION(W/B)	Φ88.9×8.2	见图 SEE DRAW	
M01	24"	PN16	HG/T21521-2014	WN	RF	人孔 MANHOLE	Φ630×12	按标准 AS PER CODE	
C11	1 1/2"	150	HG/T20615-2009	LWN	RF	远传温度计接口(带法兰盖) TI CONNECTION(W/B)	Φ65×12	1820	
C31	2"	150	HG/T20615-2009	LWN	RF	远传压力表接口(带法兰盖) PI CONNECTION(W/B)	Φ78×13	见图 SEE DRAW	
C41	2"×3"	150	SH/T3426-2014	JWN	RF	就地压力表接口(带法兰盖) PG CONNECTION(W/B)	Φ60.3×5.65/Φ88.9×5.49	见图 SEE DRAW	
C51~C54	3"	150	ASME B16.5-2020	WN	RF	远传液位计接口(带法兰盖) LI CONNECTION(W/B)	Φ88.9×8.2	1820	
C61~64	2"×3"	150	SH/T3426-2014	JWN	RF	就地液位计接口(带法兰盖) LG CONNECTION(W/B)	Φ60.3×5.65/Φ88.9×5.7	1820	
SV1~4	4"	--	--	--	--	排气孔 EXHAUST PORT	Φ108×4	见图 SEE DRAW	
SA1~2	20"	--	--	--	--	检查孔 CHECK HOLE	Φ524×12	见图 SEE DRAW	
U01a~f	1 1/2"	150	HG/T20615-2009	LWN	RF	HW70进口 HW70 INLET	Φ65×12	1800	
U02a~f	1 1/2"	150	HG/T20615-2009	LWN	RF	HW70出口 HW70 OUTLET	Φ65×12	1800	
E1~3	2"	150	HG/T20615-2009	WN	RF	HW70进口 HW70 INLET	Φ60.3×5.65	见图 SEE DRAW	
F1~3	2"	150	HG/T20615-2009	WN	RF	HW70出口 HW70 OUTLET	Φ60.3×5.65	见图 SEE DRAW	
I1~I11	注5 NOTE 5	150	HG/T20615-2009	WN	RF	伴热入口 ACCOMPANYING HEAT INLET	注5 NOTE 5	见图 SEE DRAW	
01~10	注5 NOTE 5	150	HG/T20615-2009	WN	RF	伴热出口 ACCOMPANYING HEATING EXPORT	注5 NOTE 5	见图 SEE DRAW	

件号 PARTS. NO.	图号或标准号 DWG. NO. OR STD.NO.	名称 PARTS. NAME.	数量 QTY.	材料 MAT'L.	单 SINGLE 重量MASS(Kg)	总 TOTAL 重量MASS(Kg)	备注 REMARKS
GK	R25011-GK	管口零件 PIPE PARTS	1			862.3	
16	GB/T6170-2015	螺母 M10 NUTS	~140	8级		--	
15	GB/T12459-2017	弯头 DN80-5.49 180ES ELBOW	32	S30403	2.2	70.4	
14	HG/T21574-2018	吊耳 SP-5-15-12 (L2=312,C=101) EYELETS	2	Q235B/S31603	37.3	74.6	
13		可拆Ⅱ型保温圈 REMOVABLE TYPE Ⅱ INSULATION RING	1	组合件 ASSEMBLY		42.3	
12		加强圈 L100×100×12 STRENGTHENING RING	3	S31603	188.2	564.6	L≈10445
11		筒体 DN3200×12 SHELL	1	S31603		6281	H=6500
10		把手 HANDLE	3	S31603	0.4	1.2	
9	R25011-9	盘管 COIL	1	组焊件 WELDING PARTS		1569	
8		外半管 Φ88.9×5.49 OUTER SEMIDUCT	3组	S30403		1563	总长≈274m
7	GB/T25198-2023	封头 EHA3200×12(9.8) HEAD	2	S31603	1075.2	2150.4	
6	R25011-6	防涡挡板 ANTI-VORTEX PLATE	1	S31603		0.68	
5		铭牌 NAMEPLATE	1	S30408		--	
4		铭牌架A NAMEPLATE STAND A	1	Q345R		1	H=110
3	R25011-3	裙座 SKIRT	1	组焊件 WELDING PARTS		2993	
2		接地板 EARTH PLATE	2	S30408	0.5	1	L=110
1		基础模板 BASIC TEMPLATE	1	组焊件 WELDING PARTS		430	

会签单位名称	签名	日期

质量		(Kg)	
设备自重（供货质量） NET MASS		(Kg)	16611
空质量 EMPTY MASS		(Kg)	
操作质量 OPERATING MASS		(Kg)	
盛水质量 MASS OF FULL WATER		(Kg)	78110
最大可拆件质量 MAX. REMOV. PART MASS		(Kg)	

标记 MARK.	处数 QTY.	更改文件号 CHANGE THE FILE NO.	签字 SIGN.	日期 DATE

浙江诚泰化工机械有限公司
ZHEJIANG CHENGTAI CHEMICAL MACHINERY CO.,LTD

设计 DESIGN		加氢液中间罐 HYDROGENATION LIQUID INTERMEDIATE TANK	图号 DWG. NO. R25011-00
校核 CKD.			项目 SECTION WUHUAN ENGINEERING CO.LTD 30000 TPA NEOPEBTYL GLYCOL PROJECT
审核 DISC APP.			位号 ITEM NO. V-2302
标审 CODE APP.		总装配图 Assembly DWG	版次 REV. A02 审查图第二次修改 The second revised review drawing
工艺会签 PRO. SIGN			
批准 APPR.			比例 SCALE 1:27 第1张 OF 共1张